ADDENDUM NO. 1

December 12, 2019

Carmel Elementary School
Carmel, IN 46032

TO: ALL BIDDERS OF RECORD

This Addendum forms a part of and modifies the Bidding Requirements, Contract Forms, Contract Conditions, the Specifications and the Drawings dated November 19, 2019, by CSO Architects. Acknowledge receipt of the Addendum in the space provided on the Bid Form. Failure to do so may subject the Bidder to disqualification.

This Addendum consists of Page ADD 1-1, ADD 1-2, Guideline Schedule, ACBM and Assumed ACBM Evaluation and CSO Architects Addendum 1, dated December 6, 2019, consisting of 5 pages, Specification Section 22 47 00 – Drinking Fountain and Water Coolers by R.E. Dimond, Addendum No. 01 by R.E. Dimond, dated December 6, 2019, consisting of 3 pages, and Addendum Drawings FP201, FP203, P201, P202, P203, P204, P311, P501, P601, E211, E212, E213, E214, E404, E601, Sk-01 – Exterior Wall Mock Up by CSO.

A. GENERAL CLARIFICATIONS

1. Mandatory site walkthrough scheduled for December 23, 2019 at 10:00am for demolition contractor to visit the site and familiarize with existing conditions.

2. Pre-Award meetings will be hosted at Skillman's office (3834 S. Emerson Ave #A Indianapolis, IN 46203) scheduled as follows:

   Bid Category No. 1: January 9, 2020 at 3:30pm
   Bid Category No. 2: January 9, 2020 at 8:00am
   Bid Category No. 3: January 9, 2020 at 9:00am
   Bid Category No. 4: January 14, 2020 at 8:00am
   Bid Category No. 5: January 9, 2020 at 10:00am
   Bid Category No. 6: January 14, 2020 at 8:30am
   Bid Category No. 7: January 14, 2020 at 9:00am

Bid Category No. 8: January 14, 2020 at 9:30am
Bid Category No. 9: January 14, 2020 at 10:00am
Bid Category No. 10: January 14, 2020 at 10:30am
Bid Category No. 11: January 9, 2020 at 2:30pm
Bid Category No. 12: January 9, 2020 at 3:00pm
Bid Category No. 13: January 9, 2020 at 12:30pm
Bid Category No. 14: January 9, 2020 at 1:30pm

B. <u>SPECIFICATION SECTION 00 20 00 – Information Available to Bidders</u>

F. Guideline Schedule
G. ACBM and Assumed ACBM Evaluation

C. <u>SPECIFICATION SECTION 01 12 00 – Multiple Contract Summary</u>

1. Paragraph 3.03 Bid Categories

A. Bid Category No.1 – General Trades

<u>Add the following Specification Section:</u>

Section	06 42 16	Flush Wood Paneling

<u>Add the following Clarifications:</u>

19. Contractor shall remove underground storage tank. Underground Storage Tank Closure Report is included in specification section 00 20 00.

20. Phase II sitework up to and including stone and asphalt binder must be complete by August 10, 2021.

21. Bid Category No. 1 Contractor is to include remediation and removal of existing hazardous materials prior to demolition. Reference the ACBM and Assumed ACBM Evaluation report included in specification section 00 20 00.

Activity Name	Original Duration	Start	Finish
Carmel Elementary School	417	29-Jan-20	02-Sep-21
Project Administration	417	29-Jan-20	02-Sep-21
Notice to Proceed	0	29-Jan-20*	
Mobilization	0	02-Mar-20*	
Building Enclosure	0		09-Oct-20
Permanent Power	0		13-Nov-20
Permanent HVAC	0		13-Nov-20
Punchlist	0		18-Jun-21
Substantial Completion	0		18-Jun-21
Punchlist & Final Cleaning & Commissioning	10	21-Jun-21	02-Jul-21
Final Completion Building & Phase I Sitework	0		02-Jul-21
Owner Furniture & Technology	20	05-Jul-21	30-Jul-21
Open For 2021 Academic Year	0		10-Aug-21*
Final Completion Phase II Sitework	0		02-Sep-21
Sitework	394	02-Mar-20	02-Sep-21
Site Demolition	15	02-Mar-20	20-Mar-20
Mass Excavation	20	23-Mar-20	17-Apr-20
Building Pad	15	30-Mar-20	17-Apr-20
Sanitary Main	20	20-Apr-20	15-May-20
Storm Sewer Phase I	20	18-May-20	12-Jun-20
Water Main	15	18-May-20	05-Jun-20
Sanitary Lateral	15	08-Jun-20	26-Jun-20
Site Concrete Phase I	20	14-Dec-20	08-Jan-21
Site Lighting	10	14-Dec-20	25-Dec-20
Asphalt Stone & Binder Phase I	5	11-Jan-21	15-Jan-21
Site Furnishings & Landscape Phase I	10	18-Jan-21	29-Jan-21
Asphalt Surface Phase I	5	15-Feb-21*	19-Feb-21
Storm Sewer Phase II	10	09-Jul-21	22-Jul-21
Site Concrete Phase II	20	16-Jul-21	12-Aug-21
Asphalt Stone & Binder Phase II	10	30-Jul-21	12-Aug-21
Site Furnishings & Landscape Phase II	10	13-Aug-21	26-Aug-21
Asphalt Surface Phase II	5	27-Aug-21	02-Sep-21
Core & Shell	190	23-Mar-20	11-Dec-20
Cement Stabilization of Building Pad	5	23-Mar-20	27-Mar-20
Lime Stabilization of Building Pad	5	20-Apr-20	24-Apr-20
Aggregate Piers	10	27-Apr-20	08-May-20
Footings	35	11-May-20	26-Jun-20
CMU Foundations	15	25-May-20	12-Jun-20
Structural Steel - Metal Deck & Steel Bar Joists	45	29-Jun-20	28-Aug-20
Concrete Slab on Grade	20	27-Jul-20	21-Aug-20
CMU Masonry	35	31-Aug-20	16-Oct-20
Concrete Slab on Deck	5	31-Aug-20	04-Sep-20
Roofing	25	31-Aug-20	02-Oct-20
Exterior Metal Stud Framing & Densglass	30	31-Aug-20	09-Oct-20
Brick Veneer & Stone	40	19-Oct-20	11-Dec-20
Building Interior	265	15-Jun-20	18-Jun-21
MEP Underground Rough-In	30	15-Jun-20	24-Jul-20
MEPF Overhead Rough-In	50	07-Sep-20	13-Nov-20
Interior Metal Stud Framing	50	07-Sep-20	13-Nov-20
MEPF In-Wall Rough-In	50	12-Oct-20	18-Dec-20
Hang & Finish Drywall	50	26-Oct-20	01-Jan-21
Painting	40	09-Nov-20	01-Jan-21
Ceilings	50	04-Jan-21	12-Mar-21
Specialties & Equipment - Divisions 10-12	40	04-Jan-21	26-Feb-21
Casework	40	04-Jan-21	26-Feb-21
Athletic Flooring	30	04-Jan-21	12-Feb-21
Kitchen Equipment	30	04-Jan-21	12-Feb-21
Flooring	40	15-Mar-21	07-May-21
MEPF Trim-Out	30	15-Mar-21	23-Apr-21

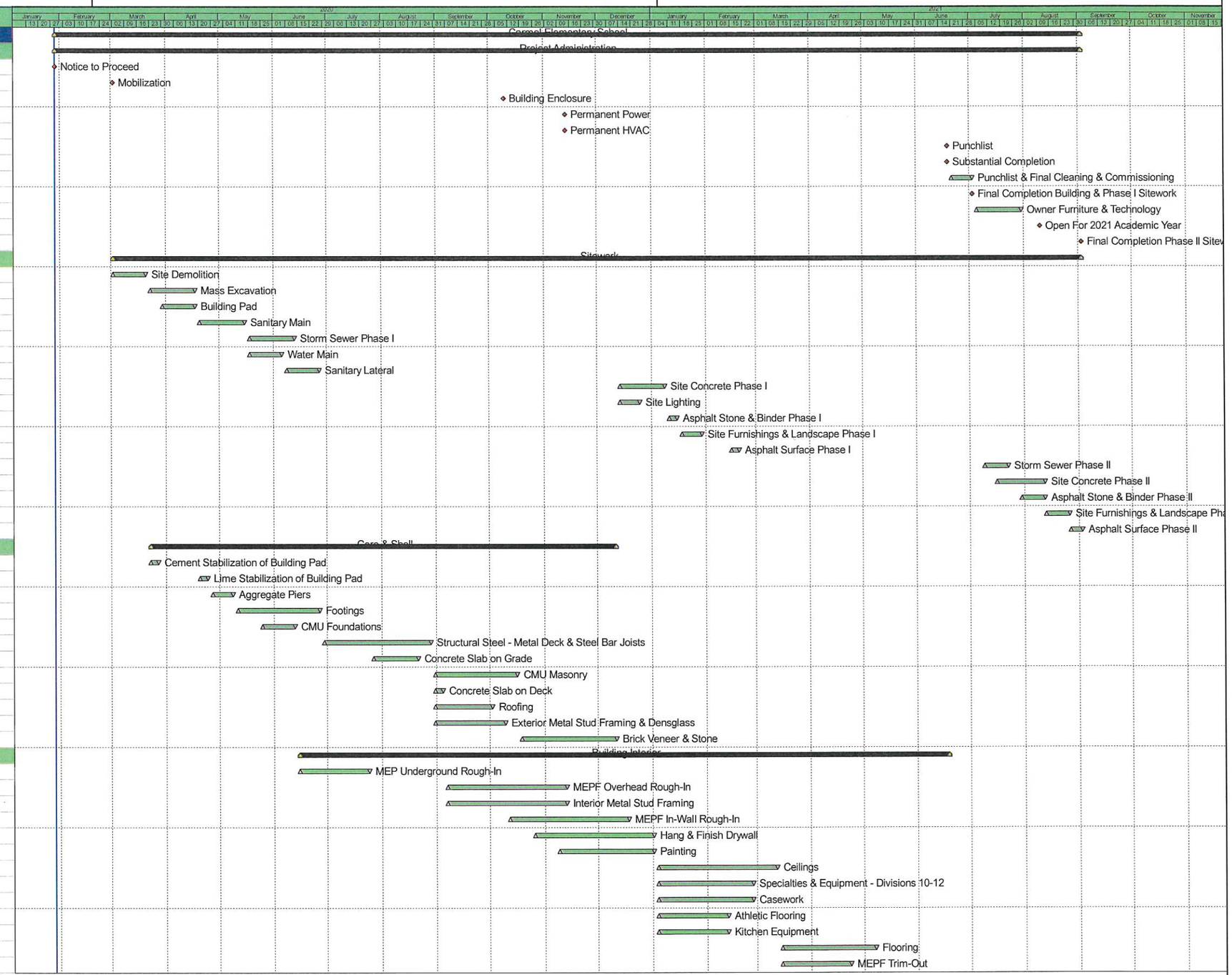

Actual Work | Critical Remaining Work | Summary | Remaining Work | Milestone

Carmel Elementary School - Guideline Schedule

SKILLMAN

Activity Name	Original Duration	Start	Finish
Doors & Door Hardware	30	10-May-21	18-Jun-21
Building Demolition	30	28-May-21	08-Jul-21
Mobilization	0	28-May-21*	
Owner Moveout	10	28-May-21	10-Jun-21
Hazardous Material Abatement	5	28-May-21	03-Jun-21
Carmel Elementary Demo	20	11-Jun-21	08-Jul-21

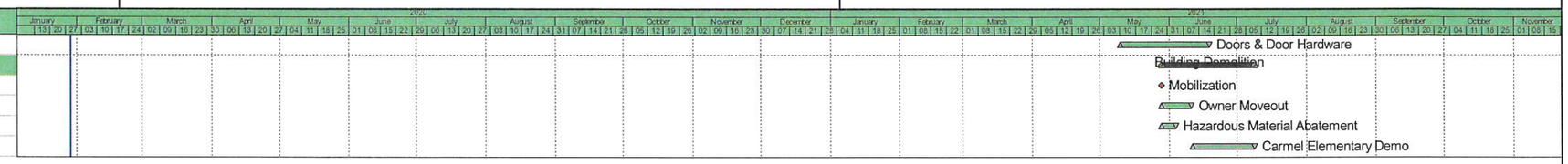

Actual Work | Critical Remaining Work | Summary
Remaining Work | Milestone

ACBM and Assumed ACBM Evaluation

Building: Carmel Elementary
Date of Reinspection: 8/7/19
Previous Inspection Date: 10/17/18

Constructed: 1961
Remodeled: 1987

Homogeneous Area or Salient				Condition		Damage Assessment						
HA #	Material	Type	Size	Previous	Present	Present	Type	Cause	Severity	Extent	Access	Potential
2	9"/12" floor tile	MM	500 SF	NF	NF	G	general	normal wear	L	D	H	L

Inspector: Matthew E. Richard

Signature:

IDEM Certification #: 19A007826

Comments: No changes since October 2018 inspection. Renovations completed in August 2002. Some original floor tile still remains under new carpeting in Media Center. 12" tile spot filling in original 9" tile areas under carpet has not been tested, and should be assumed as ACBM. No further action necessary at this time.

Damage Assessment Key

Type

SM - surfacing material, sprayed or troweled
TSI - thermal systems insulation
MM - miscellaneous materials, including flooring, wall coverings, ceiling tile, drywall

Condition

Previous: friable (F), non-friable (NF)
Present: friable (F), non-friable (NF)

Damage Assessment

Present Condition: good - G (minor), fair - F (damage), poor - P (significant damage)
Type: simple description
Cause: list known or probable cause
Severity: low - L (minor), moderate - M (damage), high - H (significant damage)
Extent: localized (L), distributed (D)
Access(ibility): low (L), moderate (M), high (H)
Potential damage: low - L (minor), moderate - M (damage), high - H (significant damage)

ADDENDUM

CSO
ARCHITECTURE · INTERIOR DESIGN

JOHN E. RIGSBEE REGISTERED No. 920019 STATE OF INDIANA ARCHITECT

ADDENDUM NO: 1

BID PACKAGE NO: N/A

PROJECT: Carmel Clay Center Elementary School

PROJECT NO: 18094 DATE: 12/6/2019 BY: Brent Hite

This Addendum is issued in accordance with the provisions of "The General Conditions of the Contract for Construction," Article 1, "Contract Documents" and becomes a part of the Contract Documents as provided therein. This Addendum includes:

Addendum Pages:
Attachments: 22 47 00 – DRINKING FOUNTAIN AND WATER COOLERS by R.E. Dimond
ADDENDUM NO. 01 by R.E. Dimond
1 SK-01 – EXTERIOR WALL MOCK UP by CSO

PART 1 - BIDDING AND CONTRACT REQUIRMENTS

1.01 NOT USED

PART 2 - SPECIFICATIONS

2.01 06 40 00 – ARCHITECTURAL MILLWORK

A. Add 1.02.A.3 BANQUETTES

B. Add 2.01.G PADDING AND CUSHIONING as follows:

G. Padding and Cushioning: Comply with the requirements of the authorities having jurisdiction for flame spread classification; flame spread index shall not exceed 100 when tested in accordance with ASTM E 84 or ASTM E 162.

1. Cushioning: Provide fire resistant neoprene foam cushioning formulated for seat cushions with required solid substrate, compression and density as selected by the Architect.
2. Fill: Provide fire resistant, "Dacron" fill, specially formulated for seat cushions, as selected by the Architect.

C. Add 2.01.H UPHOLSTERY as follows:

H. Upholstery Fabric: As indicated on Drawings.

D. Add 2.06 BANQUETTES as follows:

2.06 BANQUETTES:

A. Fabrication, General

8831 Keystone Crossing, Indianapolis, IN 46240 | 317.848.7800 | csoinc.net

1. Provide banquettes/woodwork complying with AWI Standards for Premium Grade.
2. Furniture details indicate the required type and quality of construction. Modifications to conform to manufacturers standards will be considered providing they comply with the Contract Documents and subject to acceptance by the Tolerancprinted on, or other Identifying markings shall appear on the exposed surfaces of any of the furniture items.
3. Provide additional reinforcing as required to insure a rigid assembly. Exposed surfaces shall be free from dents, tool marks, warpage, buckle, glue and open joints, or other defects affecting serviceability or appearance. Accurately fit all joints, comers and miters. Conceal all fasteners. Make threaded connections up tight so that threads are entirely concealed.
4. Lay upholstery material smooth and even. Cut evenly along intersecting surfaces. Provide welted upholstery where shown. All upholstery material shall be lined up so that lines of patterns are straight and continuous and with linear patterns parallel to each other, and with vertical lines perpendicular. Upholster material smooth with sufficient tension so that the finished installation is free of tacks, scraps, ripples, scallops or puckers.
5. Apply fabrics to surfaces shown using application methods and fastenings as recommended by the fabric manufacturer to achieve a smooth, undistorted finish to the satisfaction of the Architect

2.02 <u>06 42 16 – FLUSH WOOD PANELING</u>

A. Add section in its entirety.

2.03 <u>09 50 00 – WOOD PANEL CEILINGS</u>

A. Revise name of section to read “WOOD SLAT CEILINGS AND WALLS”

B. Revise specification section identified in header and footer to be 09 50 00.

C. Add 1.02.1.4 as follows:

4. Wood slat walls

D. 2.01.B: Delete line in its entirety.

E. 2.02.A.1: Renumber existing lines 1-11 as 2-12. Add new line 1 to read as follows:

4. Basis-of-Design Product: The design for wood panel ceilings is based on Woodworks Grille Tegular 663008 as manufactured by Armstrong World Industries

F. Add 2.03 as follows:

4. 2.03 WOOD SLAT WALL UNITS

1. Basis-of-Design Product: The design for wood slat wall type WP2 is based on Woodworks Linear Veneered Planks as manufactured by Armstrong World Industries.

2. Surface Texture: Smooth

3. Composition: Fire-retardant Particle Board
4. Species/Finish: Constants Redux Wood Wheat
5. Size: 3-1/4 in wide, length as noted on drawings.
6. Reveal: As indicated on drawings
7. Profile: ½"
8. Sabin: N/A
9. Edge Banding and Trim: To match face veneer
10. Noise Reduction Coefficient (NRC): ASTM C 423, Classified with UL label on product carton 0.40.
11. Flame Spread ASTM E84 HPVA Fire Classification (Fire Class)
12. Dimensional Stability: Standard

2.04 09 84 00 – ACOUSTIC ROOM COMPONENTS

A. Add 2.03 as follows:

2.03 TACKABLE ACOUSTICAL WALL PANELS

A. Manufacturers: Subject to compliance with requirements, provide one of the following:

1. Armstrong World Industries, Inc.
2. Conwed Acoustical Products
3. Golterman & Sabo Acoustics
4. Owens-Corning Fiberglass
5. Kinetics Noise Control, Sports Board Conform
6. Wenger Corporation
7. Xorel Artform by Carnegie

B. Basis of Design: Xorel Artform Shapes by Carnegie, MI-CORE Plank or equivalent

1. Fabric: As indicated on Finish Schedule or, if not indicated, as selected from manufacturer's full range of fabric options.
2. Thickness: ¾"

C. Back-Mounted, Tackable Acoustical Panels: Manufacturers standard panel construction consisting of inorganic minerals and fibers resistant to moisture and warping.

D. Sound-Absorption Performance: Provide acoustical wall panels with minimum noise reduction coefficients as indicated by basis of design product, as determined by testing per ASTM C 423 for mounting type specified.

2.05 10 11 00 – VISUAL DISPLAY UNITS

2.05 TACKABLE ACOUSTIC SURFACE

A. Tackable Printed Visual Display Panel: 100% polyester fiber panel consisting of 50% +/- recycled PET fiber, ½" thick, printed with water or latex based methods

B. Products: Subject to compliance with requirements, provide one of the following:

1. Basis of Design: ezoBord,

   a. ezoPrint

2. Approved Equivalent

C. Size: Dimensions as indicated, 1/2" thick

D. Color: Print, style as indicated

1. 600-1,200 dpi print resolution

E. Edge: Square

F. Surface:

1. Front: Plain
2. Back: V-Notch to accommodate wall corner

G. Mount: Tape installation

2.05 10 14 19 – DIMENSIONAL LETTER SIGNAGE

A. Add 1.02.A.2 and 3 as follows:

1. 2. Interior cast dimensional characters.
2. Interior cut dimensional characters.

B. Add 2.01.C as follows:

1. C. Cut Characters: Characters with uniform faces, sharp corners, and precisely formed lines and profiles, and as follows:

   a. Character Material: Aluminum
   b. Character Height: As indicated
   c. Thickness: 1" and ½" as indicated
   d. Finish: Painted
   e. Mounting: Exposed stand-off mounts so letters are proud of wall surface.
   f. Typeface: As indicated

PART 3 - DRAWINGS

3.01 SK-01 – EXTERIOR WALL MOCK UP

A. Insert sketch of the exterior wall mock up.

3.02 A301 – EXTERIOR ELEVATIONS

A. 1/A301 – OVERALL NORTH ELEVATION

1. Change the dimensional letter signage to read "**CARMEL ELEMENTARY SCHOOL**" typical all exterior elevations that show the dimensional letter signage.

PART 4 - OTHER ITEMS

4.01 NOT USED

A. NOT USED

PART 5 - QUESTION AND ANSWER

5.01 NOT USED

A. NOT USED

END OF ADDENDUM

SECTION 22 47 00 – DRINKING FOUNTAIN AND WATER COOLERS

PART 1 - GENERAL

1.1 SUMMARY

A. This Section includes the following:
   1. Type PB, pressure with bubbler, Style W, wall-mounting water coolers.

SUBMITTALS

B. Product Data: For each type of product indicated.

C. Shop Drawings: Diagram power, signal, and control wiring.

D. Operation and maintenance data.

1.2 QUALITY ASSURANCE

A. Electrical Components, Devices, and Accessories: Listed and labeled as defined in NFPA 70, Article 100, by a testing agency acceptable to authorities having jurisdiction, and marked for intended use.

B. Regulatory Requirements: Comply with requirements in ICC A117.1, "Accessible and Usable Buildings and Facilities"; Public Law 90-480, "Architectural Barriers Act"; and Public Law 101-336, "Americans with Disabilities Act"; for fixtures for people with disabilities.

C. NSF Standard: Comply with NSF 61, "Drinking Water System Components--Health Effects," for fixture materials that will be in contact with potable water.

D. ARI Standard: Comply with ARI 1010, "Self-Contained, Mechanically Refrigerated Drinking-Water Coolers," for water coolers and with ARI's "Directory of Certified Drinking Water Coolers" for type and style classifications.

E. ASHRAE Standard: Comply with ASHRAE 34, "Designation and Safety Classification of Refrigerants" for water coolers. Provide HFC 134a (tetrafluoroethane) refrigerant unless otherwise indicated.

PART 2 - PRODUCTS

2.1 PRESSURE WATER COOLERS

A. Water Coolers; EWC-1,3 : ADA, Bottle Fill

1. Basis-of-Design Product: Subject to compliance with requirements, provide Oasis PGV8EBF, or a comparable product by one of the following:

   a. Elkay Manufacturing Co.
   b. Haws Corporation.

2. Description: Accessible, ARI 1010, Type PB, pressure with bubbler, Style W, wall-mounting water cooler.

   a. Cabinet: Single cabinet, Stainless steel with stainless-steel top, HydroBoost bottle filling station.
   b. Bubbler: One, adjustable stream regulator, located on cabinet deck.
   c. Control: Push pad.
   d. Filter: One installed water filter complying with NSF 42 and NSF 53 for cyst and lead reduction to below EPA standards; with capacity sized for unit peak flow rate.
   e. Cooling System: Electric, with hermetically sealed compressor, cooling coil, air-cooled condensing unit, corrosion-resistant tubing, refrigerant, corrosion-resistant-metal storage tank, and adjustable thermostat.

      1) Capacity: 8 gph of 50 deg F cooled water from 80 deg F inlet water and 90 deg F ambient air temperature.
      2) Electrical Characteristics: 1/4 hp; 120-V ac; single phase; 60 Hz.

   f. HydroBoost Bottle Filling Station

      1) Description: Sensor-activated enhanced with user interface graphics.
      2) Quick-fill rate: 1.1 gpm with laminar flow.
      3) Green Counter: Visually displays count of plastic bottles saved from landfills.

   g. Support: Manufacturer furnished wall mounting bracket and hardware.
   h. Accessories:

      1) Provide additional cartridge filter for each installed unit.

3. Subject to compliance with requirements, provide trim products by one of the following:

   a. McGuire Manufacturing Company.

b. Engineered Brass Company.
c. Keeney Manufacturing Company.

4. Water Cooler Trim

a. Supplies: Chrome-plated copper with 1/2" NPT x 3/8” OD loose key stops.
b. Drain: Grid with NPS 1-1/4 horizontal waste and trap complying with ASME A112.18.1. NPS 1-1/4 chrome-plated cast-brass P-trap with cleanout; NPS 1-1/4 17 gauge tubular brass waste to wall; and wall escutcheon.

B. Water Coolers; EWC-2,4 : Standard cabinet

1. Basis-of-Design Product: Subject to compliance with requirements, provide Oasis PGV8AC or a comparable product by one of the following:

a. Elkay Manufacturing Co.
b. Haws Corporation.

2. Description: Accessible, ARI 1010, Type PB, pressure with bubbler, Style W, wall-mounting water cooler.

a. Cabinet: Single, coated steel with stainless-steel top.
b. Bubbler: One, adjustable stream regulator, located on cabinet deck.
c. Control: Push bar.
d. Filter: One installed water filter complying with NSF 42 and NSF 53 for cyst and lead reduction to below EPA standards; with capacity sized for unit peak flow rate.
e. Cooling System: Electric, with hermetically sealed compressor, cooling coil, air-cooled condensing unit, corrosion-resistant tubing, refrigerant, corrosion-resistant-metal storage tank, and adjustable thermostat.

1) Capacity: 8 gph of 50 deg F cooled water from 80 deg F inlet water and 90 deg F ambient air temperature.
2) Electrical Characteristics: 1/4 hp; 120-V ac; single phase; 60 Hz.

f. Support: Manufacturer furnished wall mounting bracket and hardware.
g. Accessories:

1) Provide additional cartridge filter for each installed unit.

3. Subject to compliance with requirements, provide trim products by one of the following:

a. McGuire Manufacturing Company.
b. Engineered Brass Company.
c. Keeney Manufacturing Company.

4. Water Cooler Trim

a. Supplies: Chrome-plated copper with 1/2" NPT x 3/8” OD loose key stops.
b. Drain: Grid with NPS 1-1/4 horizontal waste and trap complying with ASME A112.18.1. NPS 1-1/4 chrome-plated cast-brass P-trap with cleanout; NPS 1-1/4 17 gauge tubular brass waste to wall; and wall escutcheon.

PART 3 - EXECUTION

3.1 APPLICATIONS

A. Use carrier off-floor supports for wall-mounting fixtures, unless otherwise indicated.

B. Use chrome-plated brass or copper tube, fittings, and valves in locations exposed to view.

3.2 INSTALLATION

A. Install off-floor supports affixed to building substrate and attach wall-mounting fixtures, unless otherwise indicated.

B. Install fixtures level and plumb. For fixtures indicated for children, install at height required by authorities having jurisdiction.

C. Install water-supply piping with shutoff valve on supply to each fixture to be connected to water distribution piping. Install valves in locations where they can be easily reached for operation. Valves are specified in Division 20 Section "Pipe, Valves, Fittings, and Hangers for Fire Suppression, Plumbing, and HVAC."

D. Install trap and waste piping on drain outlet of each fixture to be connected to sanitary drainage system.

E. Seal joints between fixtures and walls and floors using sanitary-type, one-part, mildew-resistant, silicone sealant. Match sealant color to fixture color. Sealants are specified in Division 07 Section "Joint Sealants."

F. Turn over spare supply of water filters (for each unit installed) to Owner.

3.3 CONNECTIONS

A. Connect fixtures with water supplies, traps, and risers, and with soil, waste, and vent piping. Use size fittings required to match fixtures.

B. Ground equipment according to Division 26 Section "Grounding and Bonding for Electrical Systems."

C. Connect wiring according to Division 26 Section "Low-Voltage Electrical Power Conductors and Cables."

3.4 FIELD QUALITY CONTROL

A. Water Cooler Testing: After electrical circuitry has been energized, test for compliance with requirements. Test and adjust controls and safeties.

1. Remove and replace malfunctioning units and retest as specified above.
2. Report test results in writing.

3.5 ADJUSTING

A. Adjust fixture flow regulators for proper flow and stream height.

B. Adjust water cooler temperature settings.

END OF SECTION 22 47 00

R.E. Dimond
Consulting Engineers

ADDENDUM NO. 01

Carmel Clay Schools
Carmel Elementary Replacement
101 4th Ave SE
Carmel, IN 46032

December 06, 2019

DANIEL E. DIMOND
REGISTERED
No.
60910351
STATE OF
INDIANA
PROFESSIONAL ENGINEER

Daniel. E. Dimond, PE CEM

This Addendum issued prior to bidding, alters, amends, corrects or clarifies the Proposal Documents to the extent stated herein and does hereby become a part of the Proposal Documents, and will become a part of the Contract Documents of the successful bidder.

FIRE PROTECTION

A. SPECIFICATIONS: No Changes

B. DRAWINGS:

1. FP201 – Ground Floor Plan – Unit A – Fire Protection
   a. Add section view ”A: TYPICAL WING SECTION” to show the layout of the pipes and ducts above the ceiling.
2. FP203 – Ground Floor Plan – Unit C – Fire Protection
   a. Add section view ”A: CORIDOOR C107” to show the layout of the pipes and ducts above the ceiling.

PLUMBING

A. SPECIFICATIONS

1. 20 00 50 – Common Materials & Methods for Fire Protection, Plumbing, & HVAC.
   a. 3.6 Pipe Identification: Change to read as follows

1) PIPE IDENTIFICATION

a) Install Pipe Identification on each system. Include pipe service as abbreviated on Drawings i.e. CHWS, CHWR, etc. and arrows showing normal direction of flow.

i. Plastic markers, with application systems. Install on insulation segment of required for hot, un-insulated piping.

ii. Locate pipe identification as follows:

1. Exposed piping in unfinished spaces, machine rooms, and accessible maintenance spaces, such as shafts, tunnels, plenums, above lay-in ceilings and exterior non-concealed locations.
2. Near each branch, excluding short takeoffs for fixtures and terminal units. Mark each pipe at branch, if flow pattern or service is not obvious.
3. Adjacent to penetrations where pipes pass through walls, floors, ceilings, or enter non-accessible enclosures.
4. At access doors, manholes and similar access points that permit view of concealed piping.
5. At all major equipment and other points of origination and termination.
6. Spaced at maximum of 50 foot (15 m) intervals along each run. Reduce intervals to 25 feet (7.5 m) in congested areas of piping and equipment and in equipment rooms.

2. 22 47 00 – Drinking Fountain and Water Coolers
   a. See attached revised specification section:

B. DRAWINGS:

1. P201 – Ground Floor Plan – Unit A – Plumbing
   a. Separate Hi-Lo EWC-2 into separate units EWC-1 and EWC-2.
   b. Separate two Hi-Lo EWC-1 units into separate units EWC-3 and EWC-4.
2. P203 – Ground Floor Plan – Unit B – Plumbing
   a. Separate two Hi-Lo EWC-1 units into separate units EWC-3 and EWC-4.
3. P203 – Ground Floor Plan – Unit C – Plumbing
   a. Separate three Hi-Lo EWC-1 units into separate units EWC-3 and EWC-4.
4. P204 – Ground Floor Plan – Unit D – Plumbing
   a. Separate three Hi-Lo EWC-1 units into separate units EWC-3 and EWC-4.
5. P311 – Enlarged Kitchen Floor Plan – Unit C – Plumbing
   a. Separate Hi-Lo EWC-1 into two separate units EWC-3 and EWC-4.
6. P501 – Isometrics – Plumbing
   a. Revise Diagrams L, N, and O to reflect the split of Hi-Lo unit EWC-1.
7. P601 – Schedules – Plumbing
   a. Revise EWC-1 and EWC-2 in the Fixture Rough-In Schedule to show the new Mounting Heights and Fixture Description.
   b. Add EWC-3 and EWC-4 to the Fixture Rough-In Schedule.

<u>ELECTRICAL</u>

C. SPECIFICATIONS: No Changes

D. DRAWINGS:

1. E211 – Ground floor Plan Unit A – Power
   a. Revise drawing to add additional receptacles for EWC units.
2. E212 – Ground floor Plan Unit B – Power
   a. Revise drawing to add additional receptacles for EWC units.
3. E213 – Ground floor Plan Unit C – Power
   a. Revise drawing to add additional receptacles for EWC units.
4. E214 – Ground floor Plan Unit D – Power

   a. Revise drawing to add additional receptacles for EWC units.
5. E404 – Details – Theatrical Lighting
   a. Revise sheet in its entirety to update Theatrical Riser Diagram.
6. E601 – Schedules – Lighting
   a. Revise sheet in its entirety to update Light Fixture Schedule.

Attachments: Reissued Sheets: FP201, FP203, P201, P202, P203, P204, P311, P501, P601 E211, E212, E213, E214, E404, E601.

END OF ADDENDUM

CSO
ARCHITECTURE · INTERIOR DESIGN

PROJECT NAME NEW ELEMENTARY AT CARMEL ELEMENTARY SITE
PROJECT NO. 18094
DATE 12/06/19
DWG # SK-01
DRAWN BY EHMH

SUPPLEMENTAL DRAWING

GENERAL NOTES:

PROVIDE 2 SEALANT COLORS AT EACH LOCATION WHERE SEALANT IS REQUIRED FOR SELECTION BY ARCHITECT.

PROVIDE TYPICAL WALL FLASHINGS, WEEPS, MASONRY ACCESSORIES AS REQUIRED/ INDICATED IN SIMILAR WALL SECTIONS.

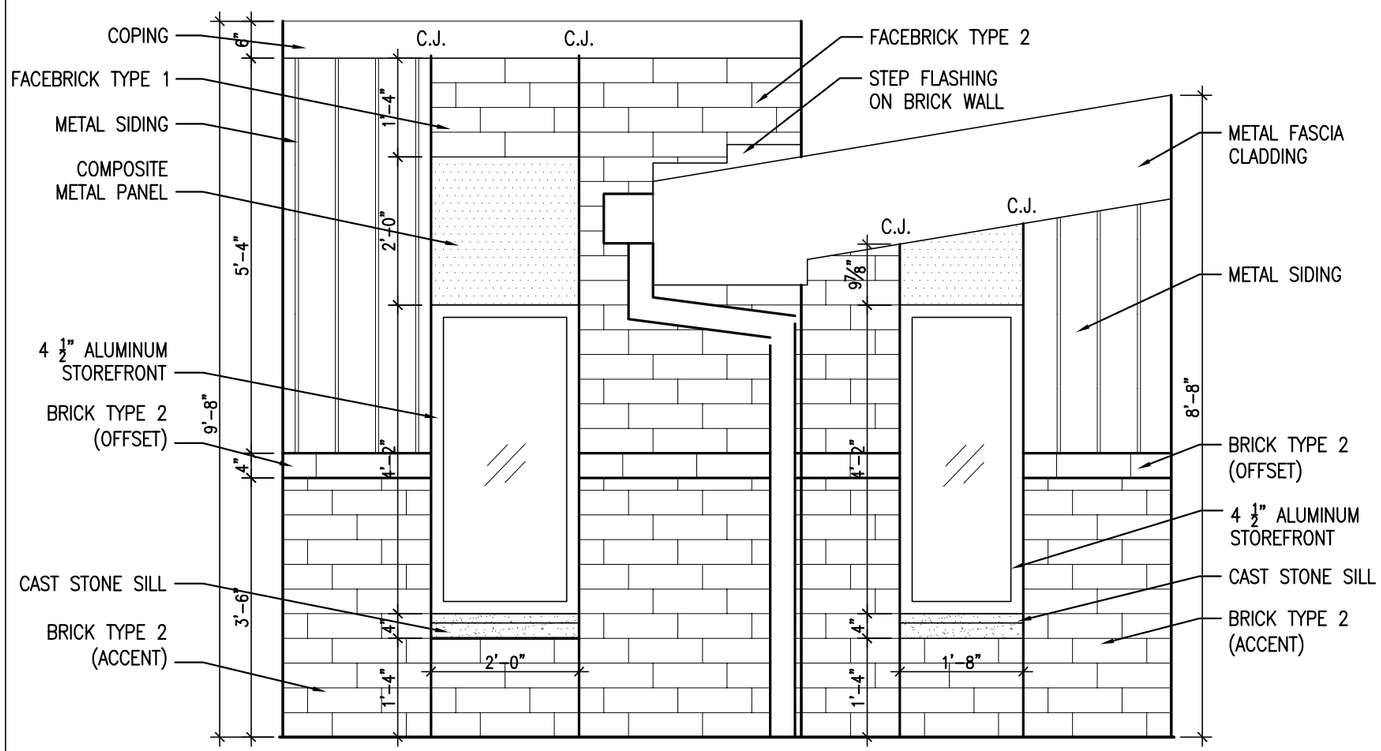

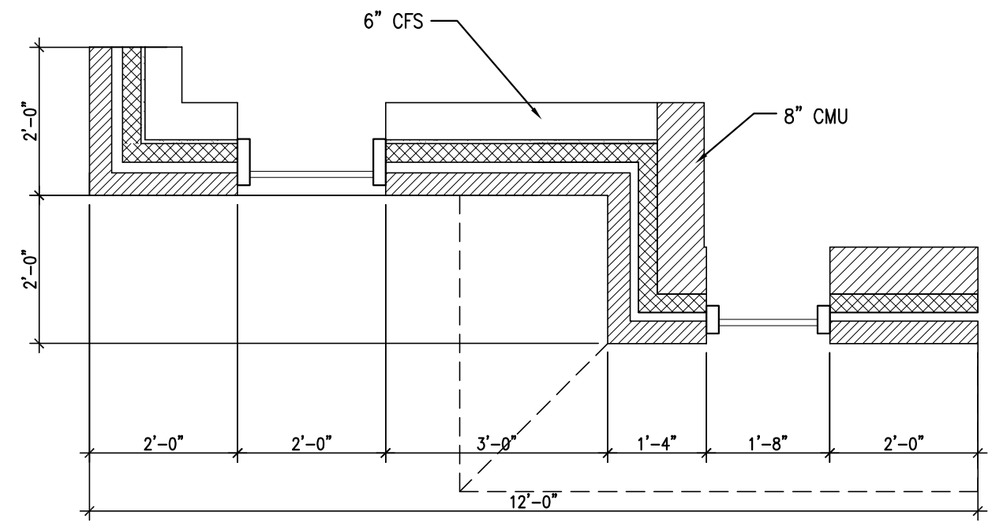

EXTERIOR WALL MOCK UP

SCALE: 1/2" = 1'-0"