ADDENDUM
NO. 2

May 28, 2020

Additions & Renovations to Lawrence Central High School
7300 E.56th St.
Indianapolis, IN 46226

TO: ALL BIDDERS OF RECORD

This Addendum forms a part of and modifies the Bidding Requirements, Contract Forms, Contract Conditions, the Specifications, and Drawings dated May 5, 2020, by Schmidt Associates. Acknowledge receipt of the Addendum in the space provided on the Bid Form. Failure to do so may subject the Bidder to disqualification.

This Addendum consists of Pages ADD 2-1 through ADD 2-5 and attached Schmidt Associates Addendum No. 2, dated May 28, 2020 consisting of 40 pages, Drawing Sheets: CU502, SF1F1, MDR101, PP1L1, P-601, ES102, EL1D1, EP1G1, E-606, E-614, E-615, E-616 and TS101.

BID

The Bid on Tuesday June 9, 2020 at 2:00 PM will be a Virtual ZOOM Bid Opening.
Bids may be dropped off in the Lobby of the Administration Building.
The bids will be taken to the Board Room, opened, and read live over ZOOM.

Join Zoom Meeting:
https://us02web.zoom.us/j/82821884021?pwd=UldaUUx0b2dDM21NN3lOU1RseHRBQT09

A. SPECIFICATION SECTION 00 31 00 BID FORM

Bid Form is forthcoming in later addendum

B. SPECIFICATION SECTION 01 12 00 MULTIPLE CONTRACT SUMMARY

Article 1.10 Labor and Materials - G

The Owner is requiring that all contractors' personnel and their onsite employees (trade employees) and subcontractors submit an expanded criminal history check through SafeVendor, a product of Safe Hiring Solutions. Please visit www.safevisitorsolutions.com/safevendor-app-agreement to create your account with SafeVendor. (Contractor is responsible for the cost of this background check). This should meet with the Owner's approval prior to the employee starting work on the project. All contractors' personnel and employees once cleared for work will be issued a project identification badge that must be worn at all times while on site. All contractors will be expected to provide the required name, address, picture state driver's license or picture state identification card information to The Skillman Corporation Site Manager no later than 24 hours in advance of the employee coming to work at the project site.

A. BID CATEGORY NO. 2 - GENERAL TRADES

Delete the following Specification Section:

05 75 00 – Decorative Formed Metal

Add the following Clarifications:

Regarding Sheet A-002 – Detail 7B and Sheet A-212 – Note 40: **BC #2 Contractor** is responsible for 2X4 WD Framing and Wood Panel Sheathing, **BC #7 Contractor** is responsible for Sound Blanket and Int GWB. **BC #12 Contractor** is responsible for painting of drywall.

Provide 40,000 SF of 8" thick stone for temporary laydown/access roads. Include placement and removal. Location designated by the Construction Manager.

Provide 20,000 SF of exterior wall (wood sheathing, studs, and plastic sheeting) to protect the interior from weather along the face of the building where structural demolition has occurred. Location designated by the Construction Manager.

Provide 20,000 SF of interior partitions/dust barriers to separate occupied areas from construction areas. Interior partitions to be stud walls with drywall (joints taped) on occupied side of partitions. Include 5000 SF of acoustical batt insulation. Include 8 (lockable) doors and frames. Location designated by the Construction Manager.

B. BID CATEGORY NO. 7 – METAL STUDS & DRYWALL

Add the following Clarifications:

Include 200 carpenter man hours for use at the discretion of the Construction Manager.

Regarding Sheet A-002 – Detail 7B and Sheet A-212 – Note 40: **BC #2 Contractor**

is responsible for 2X4 WD Framing and Wood Panel Sheathing, **BC #7 Contractor** is responsible for Sound Blanket and Int GWB. **BC #12 Contracto**r is responsible for painting of drywall.

C. BID CATEGORY NO. 8 – ACOUSTICAL

Add the following Clarifications:

BC #3 Contractor is responsible for cavity wall insulation, **BC #5 Contractor** is responsible for roof insulation and parapet sheathing, **BC #7 Contracto**r is responsible for all insulation within all stud framing.

Include 200 carpenter man hours for use at the discretion of the Construction Manager.

D. BID CATEGORY NO. 9 – CURTAINWALL, STOREFRONT & GLAZING

Add the following Specification Sections:

05 75 00 – Decorative Formed Metal

Add the following Clarification:

Bid Category #9 Contractor to caulk the interior and exterior perimeter of all their work.

E. BID CATEGORY NO. 12 – PAINTING

Add the following Clarifications:

Regarding Sheet A-001 General Plan Note N. - **BC #12 Contractor** is responsible for electrostatically painting all existing corridor lockers to remain.

Regarding Sheet A-002 – Detail 7B and Sheet A-212 – Note 40: **BC #2 Contractor** is responsible for 2X4 WD Framing and Wood Panel Sheathing, **BC #7 Contractor** is responsible for Sound Blanket and Int GWB. **BC #12 Contracto**r is responsible for painting of drywall.

Include 200 painter man hours for use at the discretion of the Construction Manager.

F. BID CATEGORY NO. 16 - PLUMBING

Add the following Specification Sections:

23 11 23 – Facility Natural-Gas Piping System (Building)

G. BID CATEGORY NO. 17 - MECHANICAL

Add the following Clarification:

23 11 23 – Facility Natural-Gas Piping System (Building) applies only to boiler connections

H. BID CATEGORY NO. 19 – ELECTRICAL AND TECHNOLOGY

Delete the following Specification Sections:

27 11 00 – Communications Equipment Backbone
27 13 00 – Communications Backbone Cabling
27 51 23.99 – Intercommunications System

I. SPECIFICATION SECTION 01 23 00 ALTERNATES

Add Alternates:

M. Alternate 11: Victaulic Grooved Pipe Fittings and Couplings for Hydronic Piping

1. State the cost to provide Grooved Mechanical-Joint Fittings and Couplings for Hydronic Piping systems by Victaulic Company if not already included in the base bid.

J. SPECIFICATION SECTION 01 32 00 SCHEDULES AND REPORTS

1. Sitework Guideline Schedule:
   West Lot – Summer of 2022
   East/Southeast Lot – Summer 2023
   North Lot – Summer of 2022

K. SPECIFICATION SECTION 01 40 00 QUALITY REQUIREMENTS

Article 1.06 – F.

1. Requirements for specialists shall not supersede building codes and regulations governing the Work.

Add Article 3.03

3.03 SCHEDULE OF MAJOR MOCKUPS

A. Composite Mock-up Panels A and B: Construct a mock-up representative of the projects exterior envelope, including specified materials, systems, finishes, installation techniques indicated, and as follows:
    a. General: Refer to Division 03 through 33 for additional requirements to be incorporated within this mockup.
    b. Exterior wall construction: Wall types ES6B, ES10U, and ES6E as indicated in Drawings.
    c. Storefront and/or curtainwall systems with glazing types indicated.
    d. Roof Edge
    e. Masonry control joint at window jamb with specified joint sealant and backer rod.

ADDENDUM NO. 2
MAY 28, 2020

PREPARED BY SCHMIDT ASSOCIATES FOR:
LAWRENCE CENTRAL HIGH SCHOOL RENOVATION
LAWRENCE TOWNSHIP, M.S.D. OF

This Addendum consists of 40 Addendum pages and 22 attachment pages totaling 62 pages.

Acknowledge receipt of this Addendum by inserting its number on the Bid Form. Failure to do so may subject the Bid to disqualification. This Addendum is part of the Contract Documents.

Bidder is encouraged to verify with reprographer of record all Addenda issued (do not rely exclusively on third party plan room services).

PART 1 - CHANGES TO PRIOR ADDENDA (NOT APPLICABLE)

PART 2 - CHANGES TO THE PROJECT MANUAL

Modifications described herein shall be incorporated in the Project Manual. All other Work shall remain unchanged.

2.1 DIVISION 09 – FINISHES

A. Section 092900 "GYPSUM WALLBOARD"

1. ADD Subparagraph 3.6 D. 4. as follows:
"4. Level 5: At panel surfaces exposed to view above 12'-0" in high-bay areas.
a. Primer and its application to surfaces are specified in Section 099123 "Interior Painting.""

B. Section 096813 "TILE CARPETING"

1. DELETE AND REPLACE Article 2.1 as follows:

"2.1 CARPET TILE

A. Products: Basis-of-Design: Subject to compliance with requirements, provide product by Interface.

1. Equals will be accepted for Architect approval during bidding. Equals will be evaluated based on pattern scale, color, size and specification. Submit physical samples and cut sheets for review with no less than four business days for Architect review prior to bids being awarded.

B. Color and Patterns

CPT-1

a. Mftr: Interface.
b. Color: Graphite 106308.
c. Collection/Pattern: Streaming/Source Material.
d. Size: 9.84 by 39.37 inches
e. Install: Ashlar
f. Locations: Classrooms
g. Source: Jae Park jae.park@interface.com.

2. CPT-2

a. Mftr: Interface.
b. Color: Grana 101154 (custom).
c. Collection/Pattern: Streaming/Upload.
d. Size: 9.84 by 39.37 inches
e. Install: Ashlar
f. Locations: Office & Conference Rooms
g. Source: Jae Park jae.park@interface.com.

3. CPT-3

a.Mftr: Interface.
b. Color: Grana 101154.
c. Collection/Pattern: Viva Colores.
d. Size: 9.84 by 39.37 inches
e. Install: Ashlar.
f. Locations: Accent. Refer to I-series for Accent Locations.
g. Source: Jae Park jae.park@interface.com.

4. WOC-1

a.Mftr: Interface.
b. Color: Onyx 104945.
c. Collection/Pattern: Step Repeat/SR999.
d. Size: 19.69 by 19.69 inches
e. Install: Non-directional.
f. Locations: Vestibules.
g. Source: Jae Park jae.park@interface.com."

2.2 DIVISION 10 – SPECIALTIES

A. Section 101400 "SIGNAGE"

1. DELETE Subparagraph 2.2 D. 4. a. in its entirety and replace with the following:

"a. Character Size: 1'-0" tall letters x 1" deep"

2. DELETE Subparagraph 2.2 D. 4. c. in its entirety and replace with the following:
"Graphic Sign: Bear Head logo from Owner – 1'-0" tall"

2.3 DIVISION 11 – EQUIPMENT

A. Section 114000 "FOODSERVICE EQUIPMENT"

1. ADD Item #109A as follows (after Item #109):

"**APPROVED ALTERNATIVE:**
ITEM #109A GLASS DISPLAY CASE
MFGR: Versa Gard, Premier, or Approved Equal
MODEL: Captura Series
QUANTITY: One (1)

Provide and set in place one (1) only custom glass case per plan. Glass display case to be fabricated per elevations and sections. To include:

a. Three (3) only intermediate shelves.
b. Silver metallic hardware finishes.
c. KEC to coordinate with front coffee counter fabrication."

2.4 DIVISION 12 – FURNISHINGS

A. Section 123200 "MANUFACTURED WOOD CASEWORK"

1. DELETE AND REPLACE subparagraph 2.7 G. as follows:

"G. Adjustable Shelf Supports: 2-pin locking plastic shelf rests complying with BHMA A156.9, Type B04013."

B. Section 123540.99 "MUSICAL INSTRUMENT & ROBE CABINET SYSTEM"

1. DELETE subparagraph 1.2 A. 2. in its entirety
2. MODIFY Text 2.2 C. as follows:

"C. Door Options (Robe Cabinet Storage)"

3. DELETE Paragraph 2.2 I. in its entirety.

C. SECTION 123553 "LABORATORY CASEWORK"

1. DELETE Subparagraph 1.12 A. 2. in its entirety.
2. MODIFY Paragraph 2.7 B. as follows:

"B. Frameless Concealed Hinges (European Type): BHMA, Type B01602, 135 degrees of opening."

2.5 DIVISION 14 - CONVEYING EQUIPMENT

A. Section 142400 "HYDRAULIC ELEVATORS"

1. ADD Subparagraph 1.2 A. 1. as follows:
   "1. Including pit ladders."

2. MODIFY Subparagraph 1.3 B. 3. c., as follows:
   "c. Requirements for pit ladders."

3. DELETE Subparagraph 2.3 A. 2. in its entirety.

4. DELETE Subparagraph 2.3 A. 3. in its entirety.

5. DELETE Subparagraph 2.3 B. 2. in its entirety.

6. DELETE Subparagraph 2.3 B. 3. in its entirety.

7. DELETE Paragraph 2.8 A. in its entirety and replace with the following:
   "A. General: Provide hall-call and car-call buttons that light when activated and remain lit until call has been fulfilled. Fabricate vandal-resistant, lighted elements with LEDs."

8. DELETE Paragraph 2.8 B. in its entirety and replace with the following:
   "B. Car Control Stations: Provide manufacturer's standard recessed or semi-recessed car control stations. Mount in return panel adjacent to car door, unless otherwise indicated. Provide one (1) per car."

9. DELETE Subparagraph 2.8 F.1. in its entirety and replace with the following:
   "1. Manufacturer's standard, code-compliant units."

10. DELETE Subparagraph 2.9 A. 6. b. in its entirety.

11. DELETE Subparagraph 2.9 A. 6. c. in its entirety.

12. DELETE Subparagraph 2.9 A. 7. in its entirety and replace with the following:
    "7. Security Features: Card-reader operation and Car-to-lobby feature."

13. DELETE Subparagraph 2.9 A. 8. c. in its entirety and replace with the following:
    "c. Inside Height: Manufacturer's standard height."

2.6 DIVISION 23 - HEATING, VENTILATING, AND AIR-CONDITIONING (HVAC)

A. Section 233300 "AIR DUCT ACCESSORIES"

1. ADD Text within paragraphs 2.2, 2.3, 2.4, 2.5 to add "United Enertech" as an acceptable manufacturer subject to the drawings and specifications.

B. Section 233423 "HVAC POWER VENTILATORS"

1. ADD Text within paragraph 2.3 to add "Twin City Fan Co." as an acceptable manufacturer subject to the drawings and specifications.

C. Section 237313 "MODULAR INDOOR CENTRAL STATION AIR HANDLING UNITS"

1. INSERT Paragraph 2.1 A. as follows:
"A. Manufacturers: Subject to compliance with requirements, provide products by one of the following:

1. Carrier Corporation
2. Trane; American Standard Inc.
3. YORK International Corporation.
4. Daikin.
5. Pace."

D. Section 237416.13 "PACKAGED, LARGE-CAPACITY, ROOFTOP AIR-CONDITIONING UNITS"

1. DELETE AND REPLACE section 237416.13 in its entirety with attached section.

E. Section 238219 "FAN COIL UNITS"

1. ADD Text to sub-paragraph 2.3 A. as follows:

11. MagicAire

12. Krueger

F. Section 236426.21 "AIR-COOLED ROTARY-SCREW WATER CHILLERS"

1. ADD Subparagraph 2.2 A. 4. as follows:

"4. Quantech"

G. Section 238223.98 "VERTICAL UNIT VENTILATORS"

1. ADD Text to sub-paragraph 2.1 A 1. as follows:

"MERV 8 is acceptable."

H. Section 238239 "UNIT HEATERS"

1. ADD Subparagraph 2.1 A. 8. as follows:
"8. Sterling"

PART 3 - CHANGES TO THE DRAWINGS

Modifications described herein shall be incorporated in the Drawings. All other Work shall remain unchanged. Note: All drawing portions included within text are Not-to-Scale.

3.1 C-SERIES DRAWINGS

A. Sheet Number CU502

1. DELETE AND REPLACE Drawing CU502 per the attached.

3.2 S-SERIES DRAWINGS

A. Sheet Number SF1A1

1. In 1/SF1A1, add workpoint dimensions from existing column CAe-C2e to new column AM-A3 as shown below.

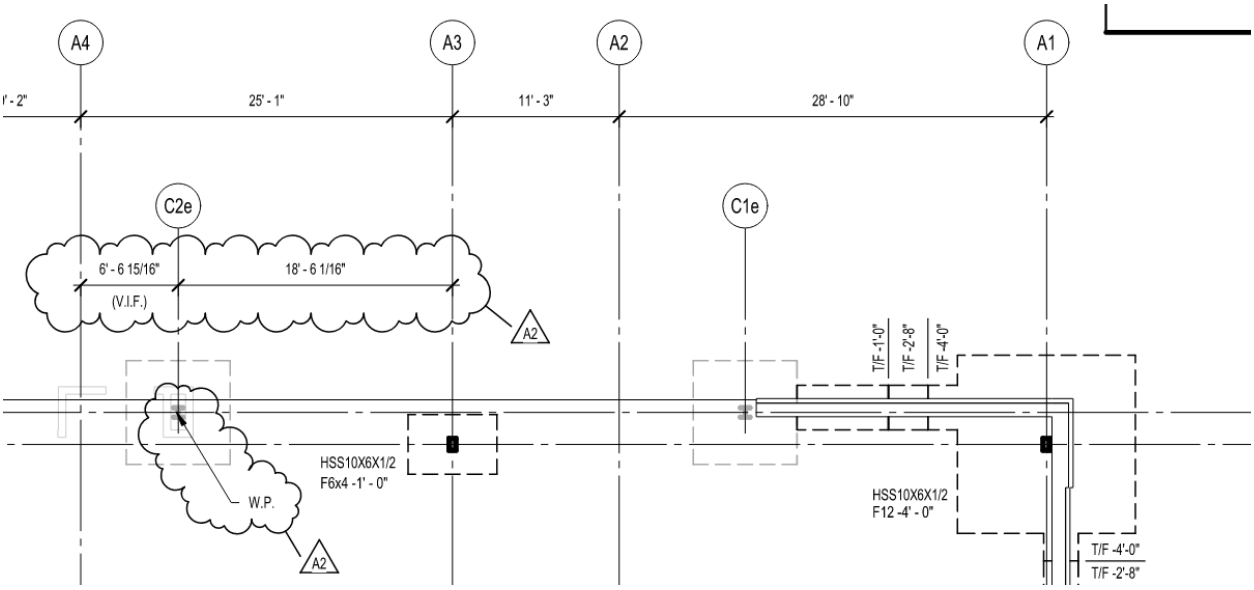

B. Sheet Number SF1F1

1. Replace with attached Drawing SF1F1 “FOUNDATION PLAN – UNIT F”. (Note: depths and infill information added at existing pool and diving well infill areas.)

C. Sheet Number SF1H1

1. In 1/SF1H1, add callout designating existing column HA-H1e as workpoint for Unit H as shown below:

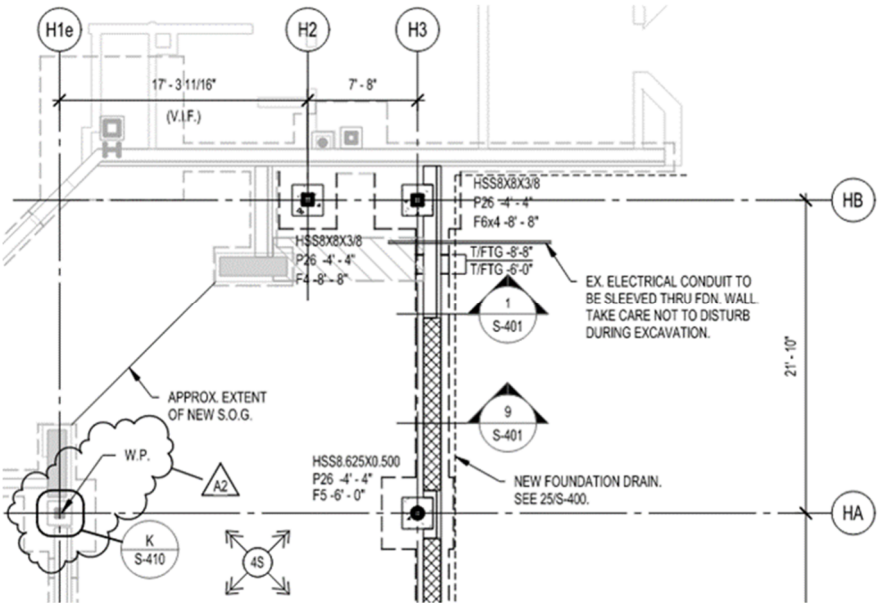

D. Sheet Number SF1K1

1. In 1/SF1K1, add callout designating existing column KDe-K1e as workpoint for Unit K as shown below:

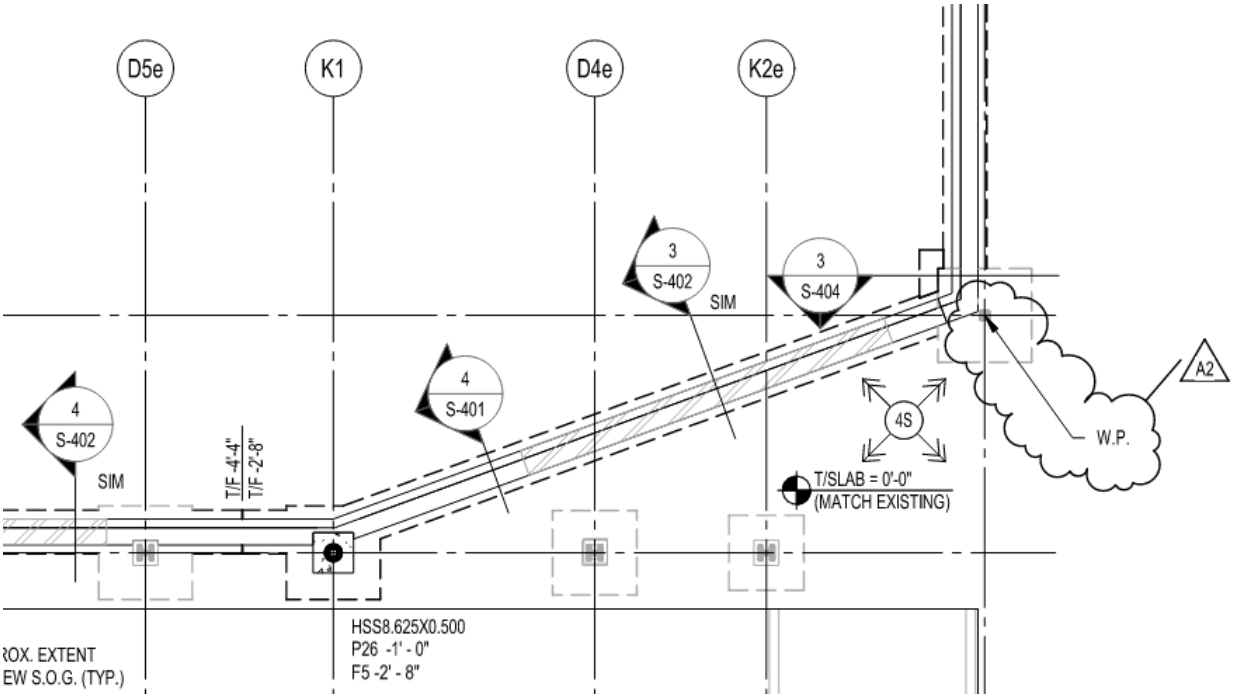

E. Sheet Number SF1A2

1. In 3/SF1A2, add workpoint dimensions from existing column CAe-A2e to new column AM-A3 as shown below:

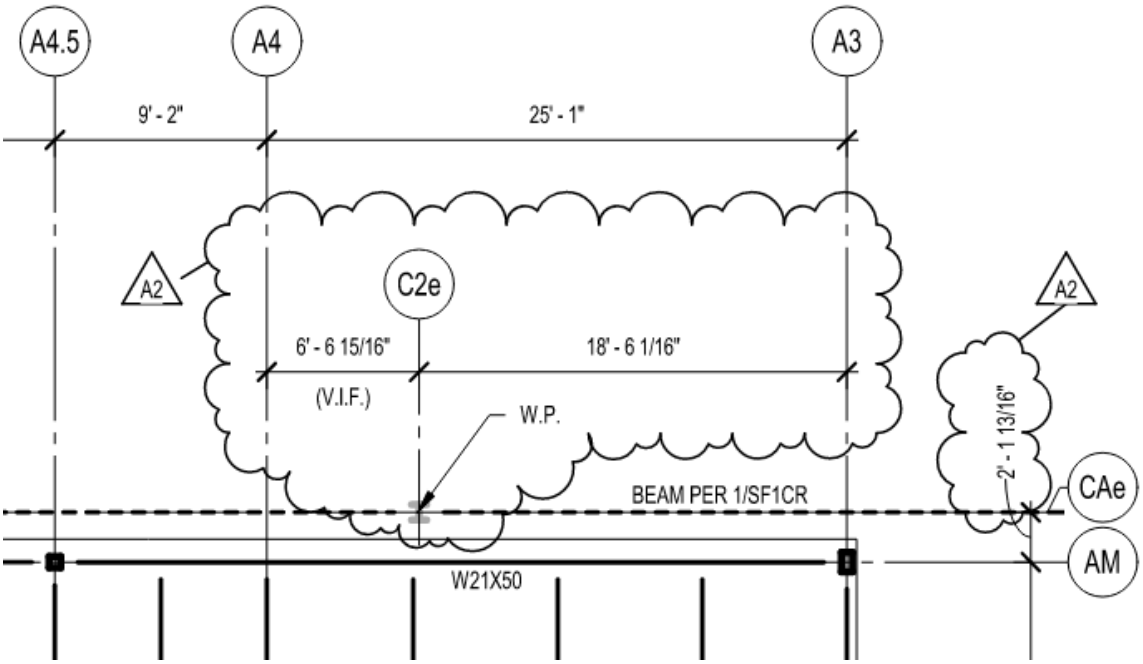

F. Sheet Number SF1HR

1. In 1/SF1HR, add callout designating existing column HA-H1e as workpoint for Unit H as shown below:

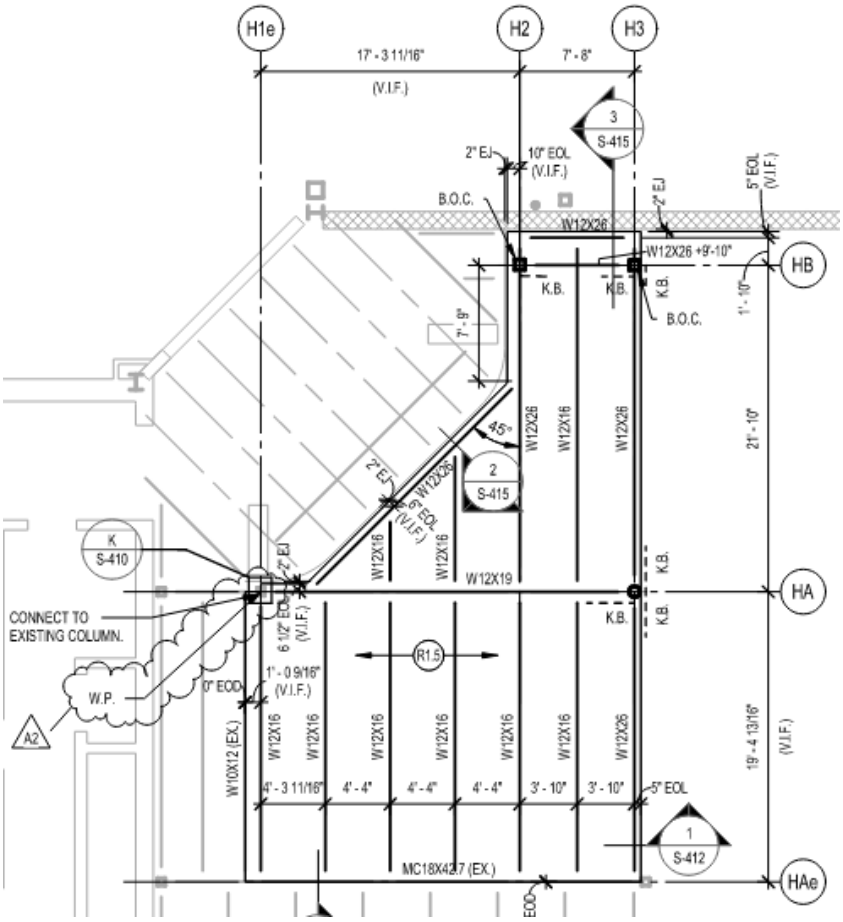

G. Sheet Number SF1KR

1. In 1/SF1KR, add callout designating column KDe-K1e as workpoint for Unit K as shown below:

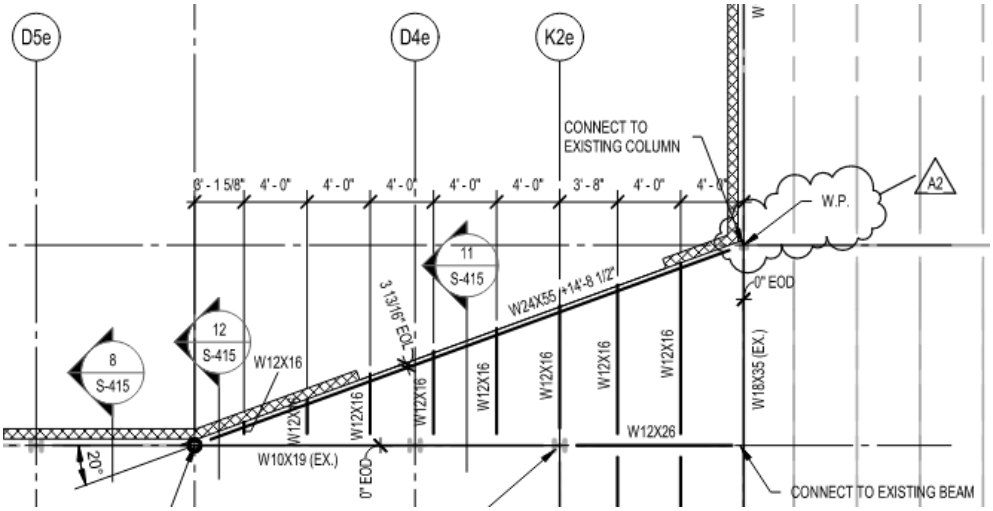

3.3 A-SERIES DRAWINGS

A. Sheet Numbers AF1A1, AF1B1, AF1A2, AF1B2, AF1A3, AF1B3

1. DELETE Floor Plan Note A15 and replace with the following:
   "A15 NOT USED"

2. ADD Floor Plan Note A17 as follows:
   "A17 0575000 – EXTERIOR METAL FIN"

B. Sheet Number AF1A1

1. DELETE Floor Plan Note A15 from the floor plan near column grid intersection AA/A3.

2. ADD storefront opening SF35 in Lobby AC100, and dimensions to CW1 location per the following:

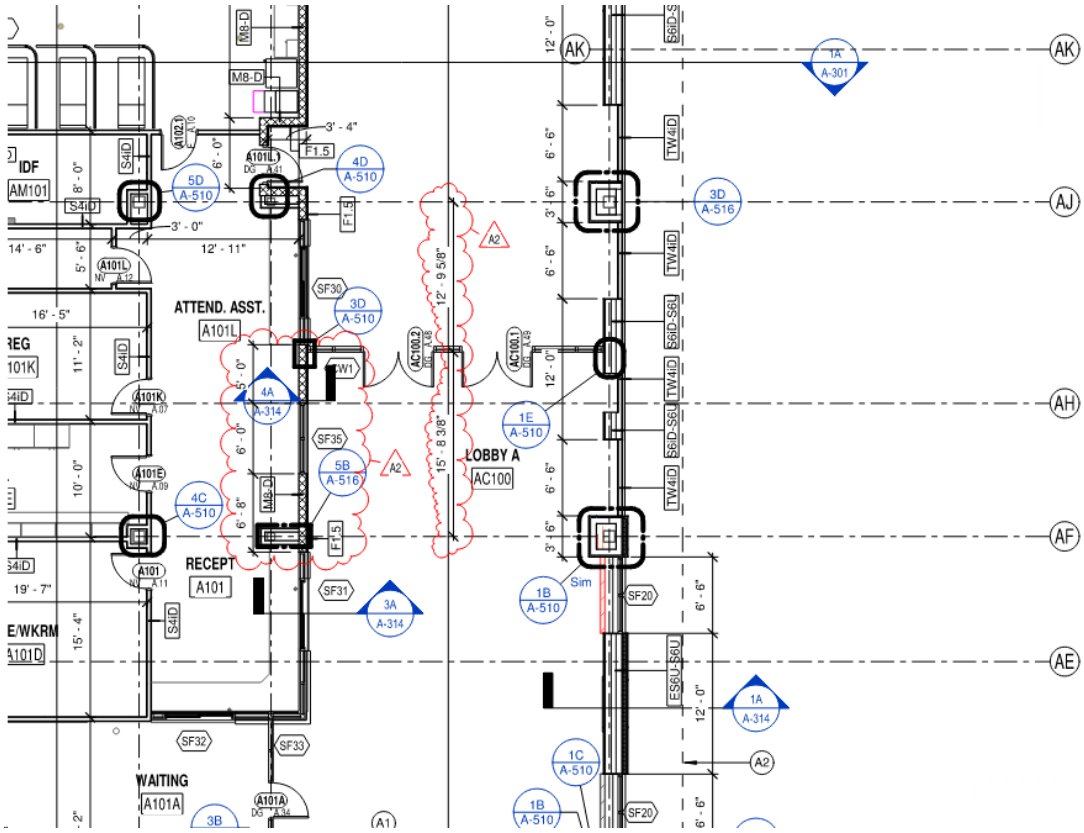

C. Sheet Numbers AF1A1, AF1A2, and AF1A3

1. ADD Floor Plan Note A17 along the south exterior wall per the Drawings portions below:

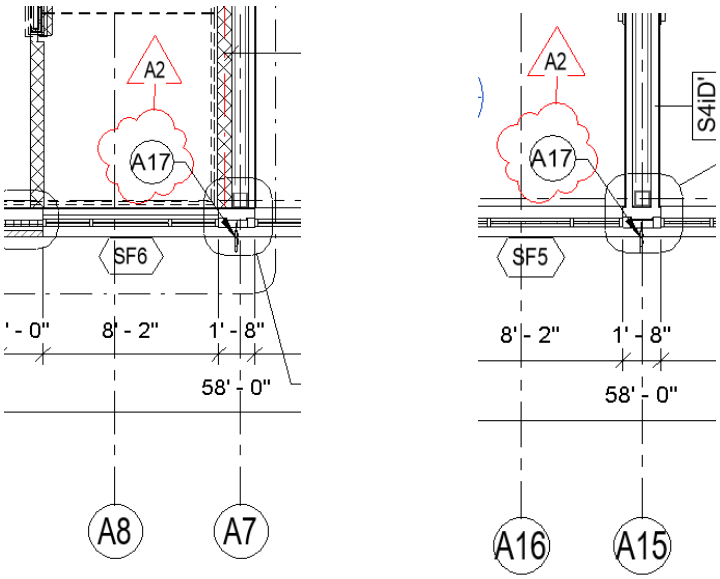

D. Sheet Number AF1B1

1. ADD Floor Plan Note A17 along south exterior wall segments of Science Rooms as indicated in the Drawings portions below:

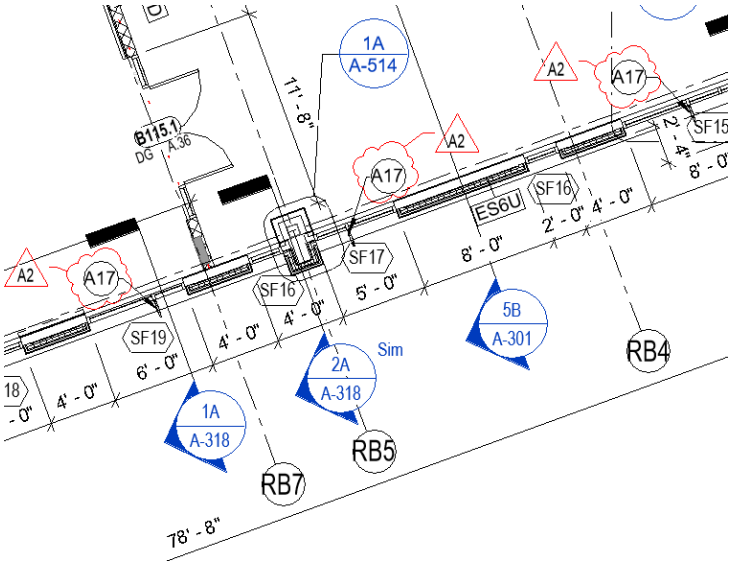

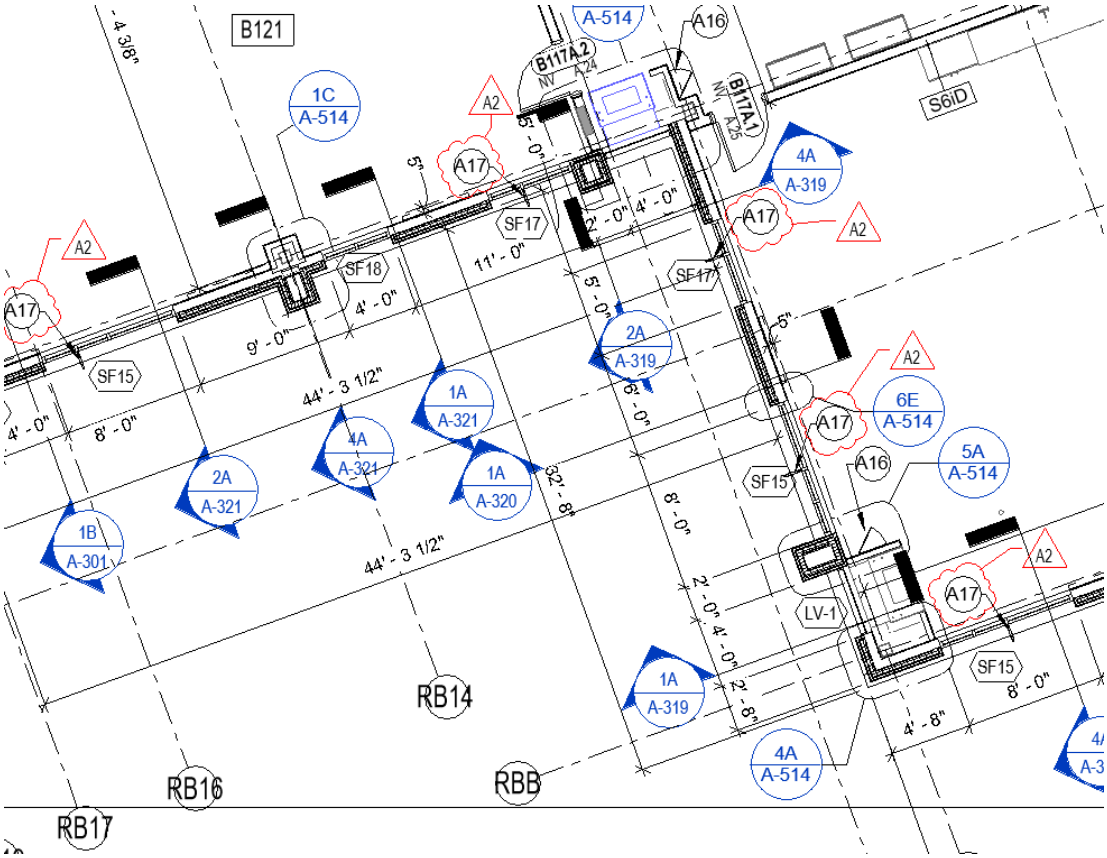

E. Sheet Number AF1B2

1. ADD Floor Plan Note 17 along the south exterior wall segments of Science Rooms as indicated in the Drawings portions below:

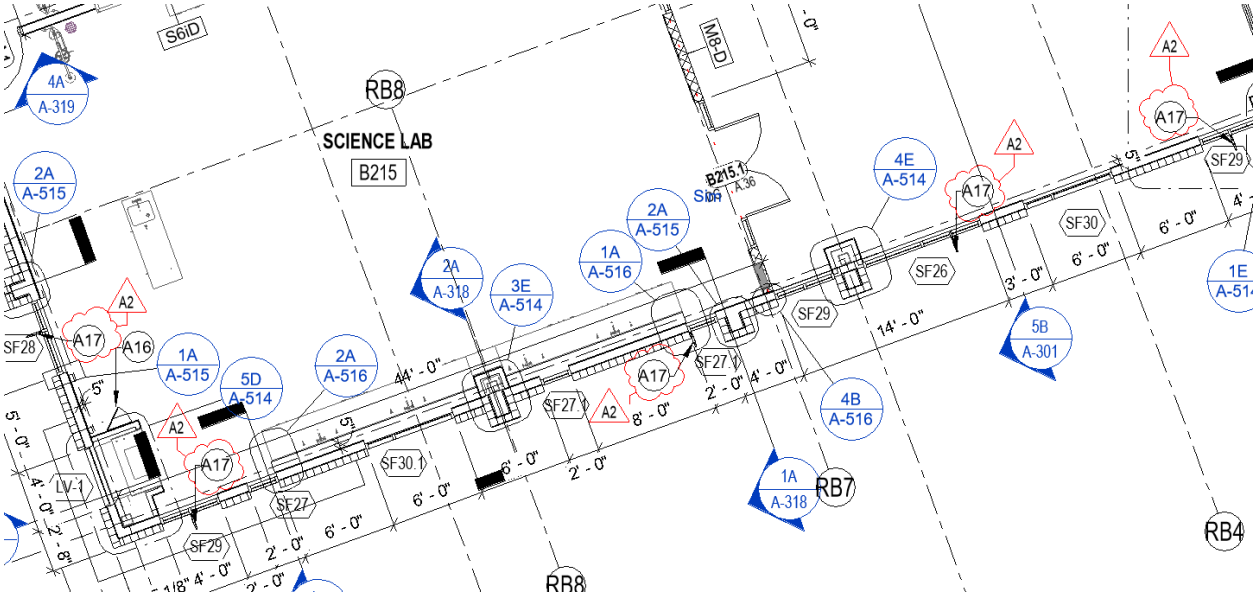

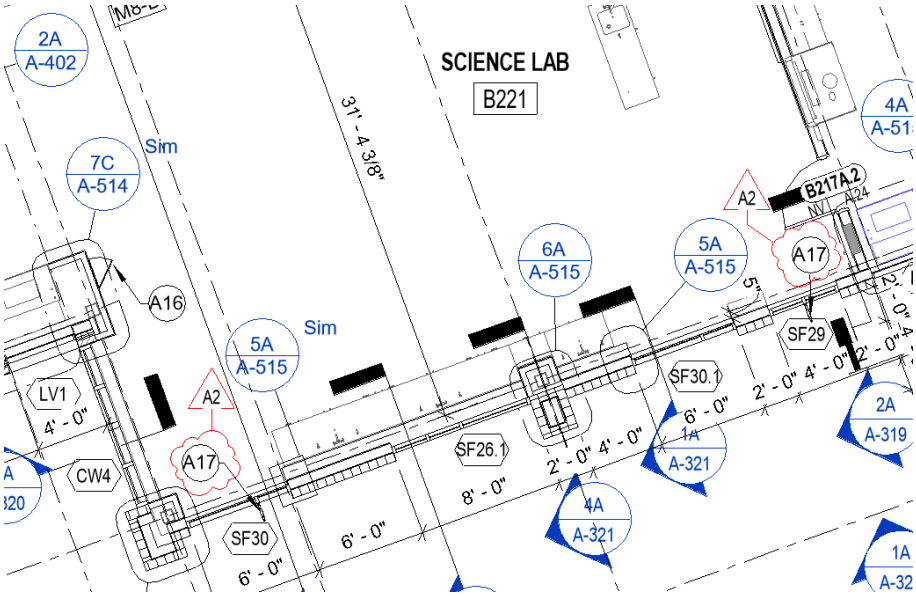

F. Sheet Number AF1B3

1. ADD Floor Plan Note 17 along the south exterior wall segments of Science Rooms as indicated in the Drawings portions below:

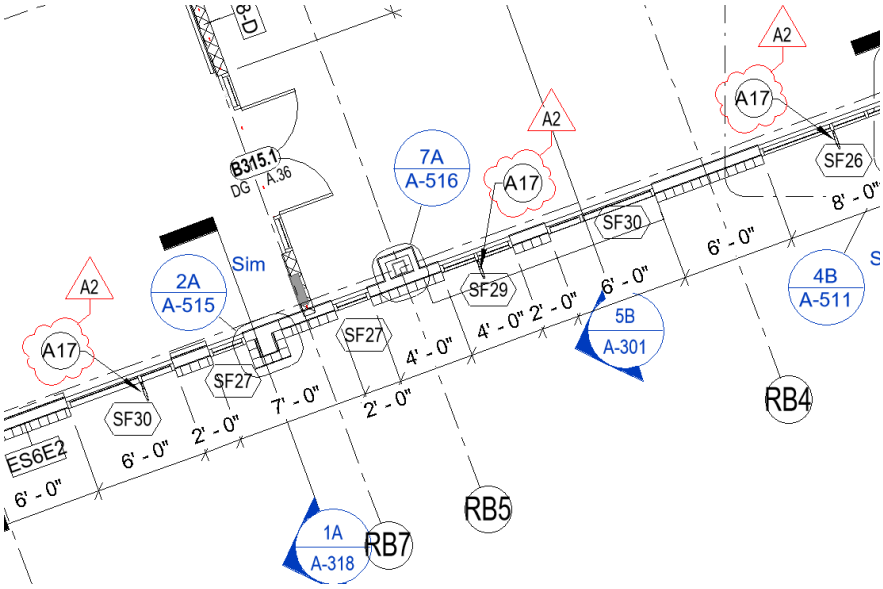

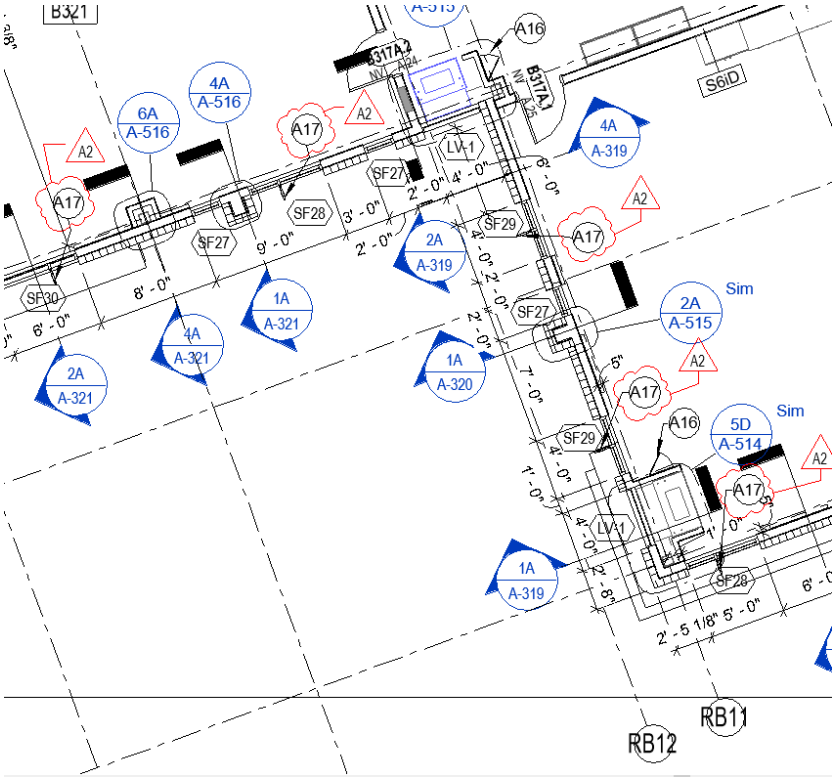

G. Sheet Numbers AF1B1, AF1B2, and AF1B3

1. ADD Floor Plan Note 17 along the south exterior wall of Classrooms B113 and B111 as indicated in the Drawing portion below:

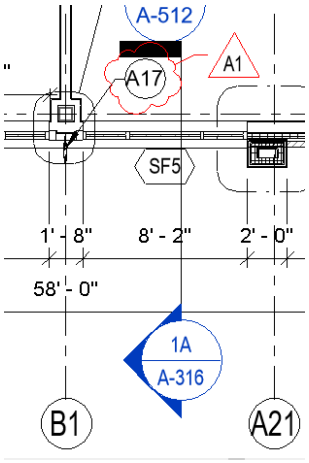

2. ADD Floor Plan Note 17 along the southwest exterior wall of Class B126 and Stairs B BS126 as indicated in the Drawing portion below:

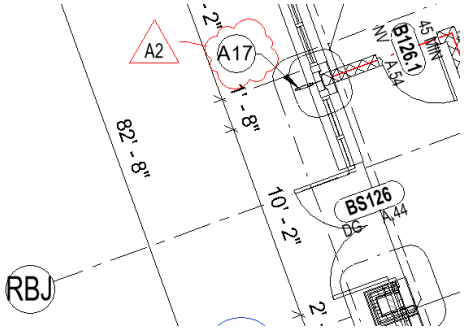

3. ADD Floor Plan Note 17 along the northwest exterior wall of Classrooms B124 and B126 as indicated in the Drawing portion below:

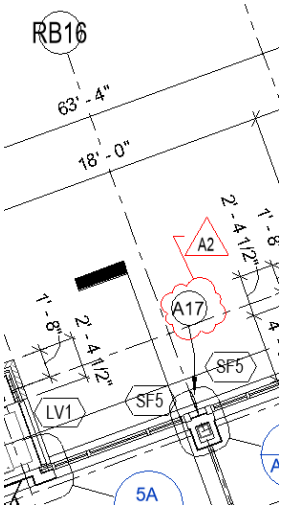

H. Sheet Number AF1C1

1. Renumber Corridor AC100 room number (located in bottom right hand corner of plan) to be "CORRIDOR AC102".

I. Sheet Number AF1J1

1. ADD Floor Plan Note 41 as follows:

   "41. INFILL EXISTING FLOOR DEPRESSION. REFER TO S-SERIES DWGS. "

2. ADD floor plan note 41 to center of room BAND – M104.

J. Sheet Numbers AC1C1 to AC1K1

1. DELETE second Reflected Ceiling Plan Note 18 starting with "ALIGN…" from the note list.

2. ADD Reflected Ceiling Plan Notes 31 and 32 as follows:

   "31. 055000 – 2" O.D. METAL PIPE GRID @ 9'-0" A.F.F. COORDINATE LOLCATION WITH ARCHITECT IN FIELD.
   32. 101400 – 1'-0"T. X 2'-0"W. X ½"D. SOLID ACRYLIC FROSTED PANEL WITH 8" TALL VINYL LETTER SIGNAGE APPLIED TO FACE. TEXT ON SIGNS TO MATCH DIMENSIONAL CHARACTERS/GRAPHICS ON SERVING LINE BULKHEADS. PANELS TO BE CEILING MOUNTED TO LAY-IN CEILING GRID WITH RIGID ANCHORS WITH STAINLESS STEEL FINISH (2 PER SIGN). MOUNTING LOCATIONS TO BE VERIFIED IN FIELD."

K. Sheet Number AC1D1

1. REVISE ceilings in Art Lab F115 and Ceramics Art Lab F113 as indicated in drawing below:

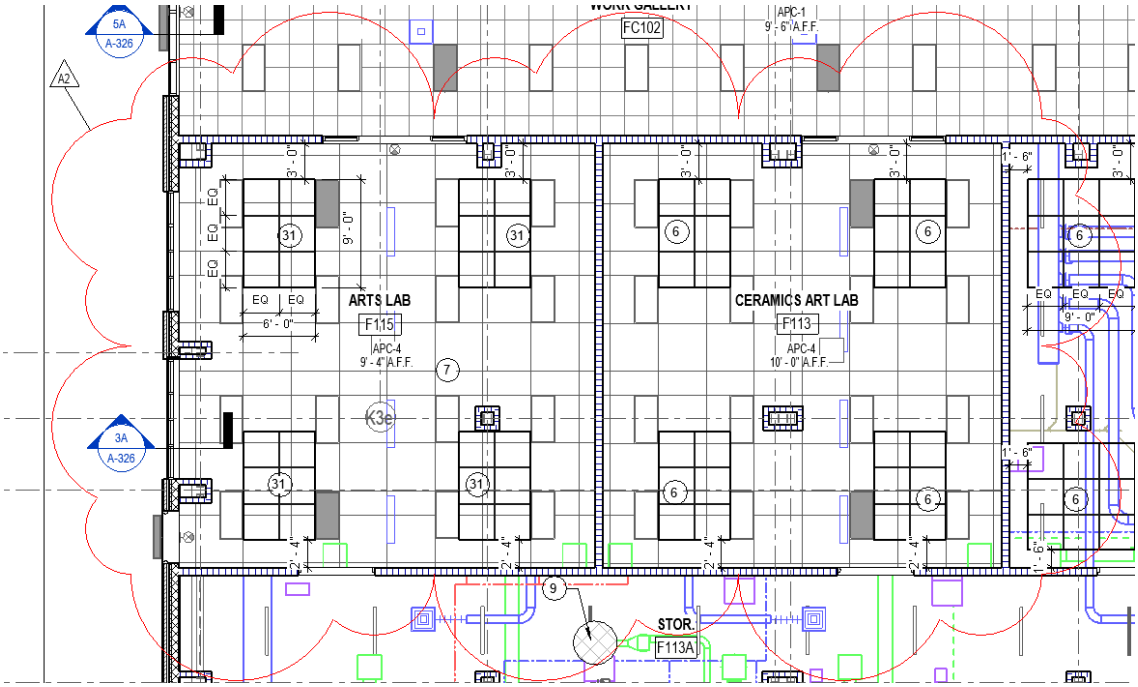

L. Sheet Number AC1K1

1. ADD 6 (six) instances of Reflected Ceiling Plan Note 32 in Serving J124. Locations for signs to be coordinated in the field.

M. Sheet Number AR510

1. DELETE Drawing T1/AR510 and replace with the following:

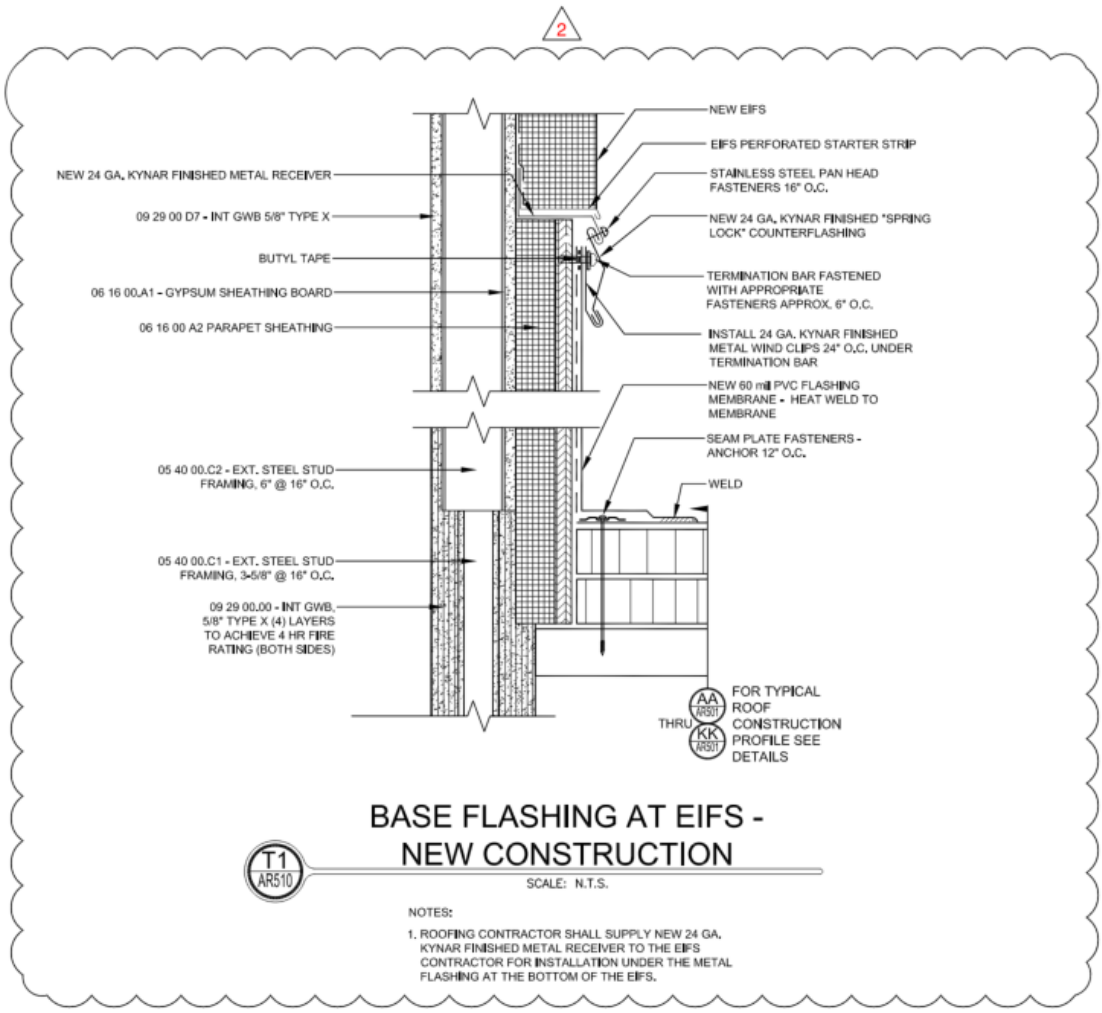

N. Sheet Number A-210

1. REVISE Drawing 1B/A-210 as indicated in the Drawing below:

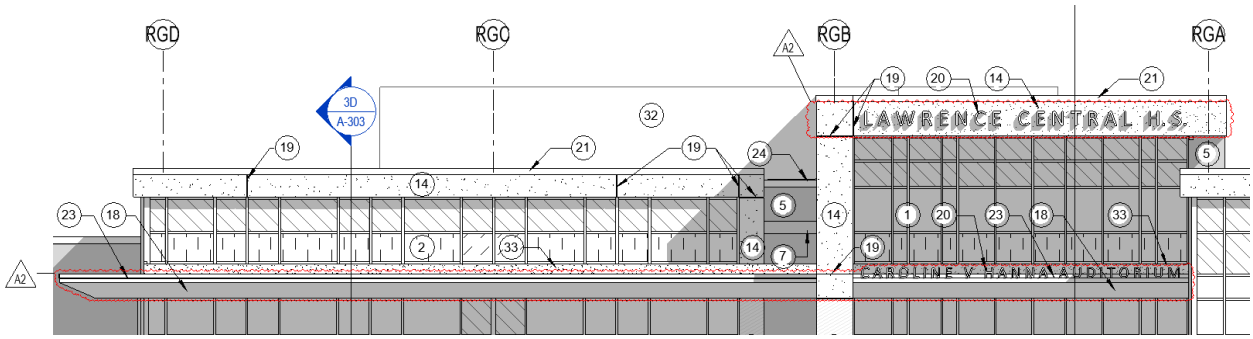

O. Sheet Number A-211

1. REVISE Drawing 1B/A-211 to add Elev. Note 29 as indicated in the Drawing below:

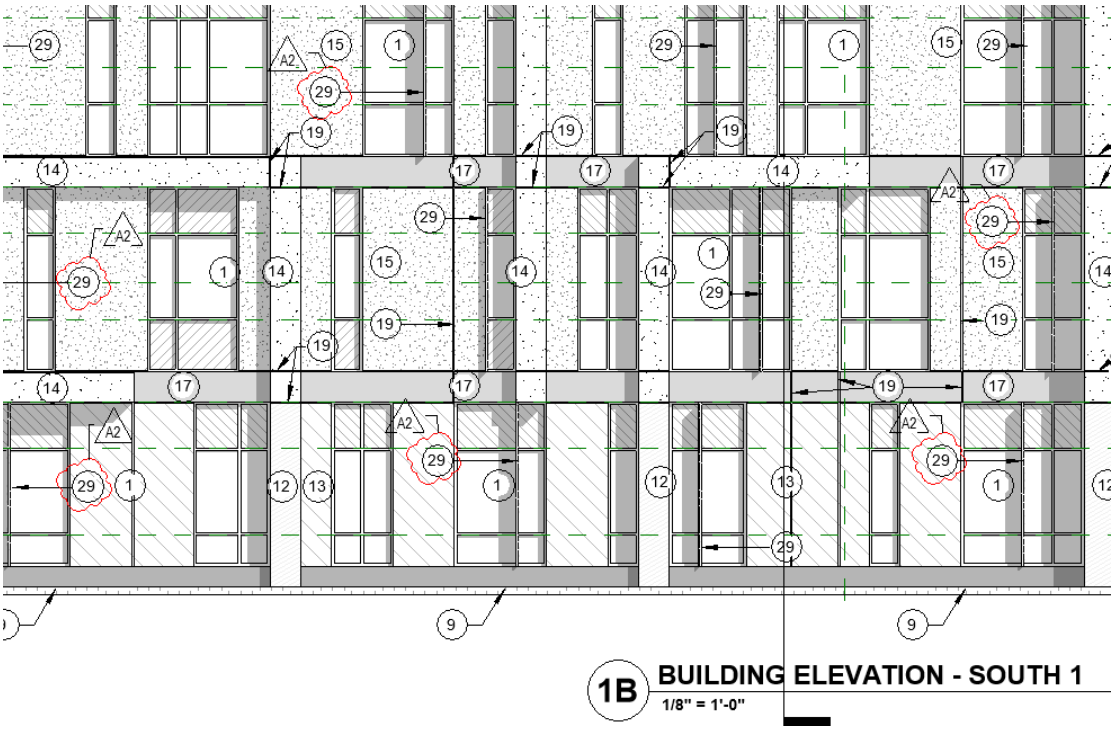

P. Sheet Number A-212

1. REVISE portion of Drawing 6E/A-212 as indicated in the Drawing below:

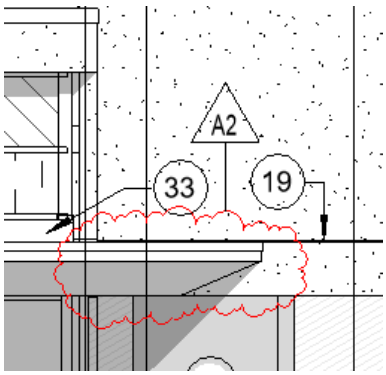

Q. Sheet Number A-403

1. ADD General Note to Sheet above Drawing 1C/A-403 as follows:

"GENERAL NOTE: COORDINATE EXACT DIMENSIONS OF HOISTWAY WITH PROVIDED ELEVATOR SUPPLIER DURING SUBMITTALS; ADJUST HOISTWAY DIMENSIONS, PIT DEPTH, AND CLEAR OVERRUN AS REQUIRED TO ACCOMMODATE APPROVED ELEVATOR."

R. Sheet Number A-603

1. ADD Storefront Elevation SF35 to the sheet as indicated below:

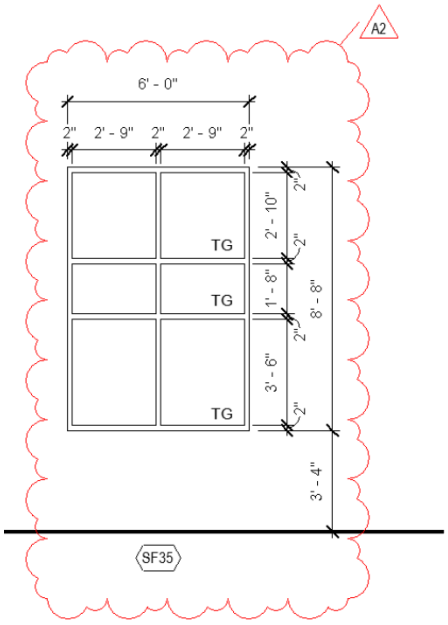

3.4 I-SERIES DRAWINGS

A. ALL "IN" SERIES SHEETS

1. MODIFY Note 27 as follows:

   "12 32 00 – Provide shelf/hanging rod assembly. Refer to detail sheet 6F/I-403 for more information."

2. ADD Note 61 as follows:

   "09 91 23 – Extent of wall to be painted P-4."

3. ADD Note 62 as follows:

   "Provide resilient tile and resilient wall base in front of counter as indicated. "

B. Sheet Number IN1A1

1. DELETE AND REPLACE Note 29 with Note 61 in the following Rooms.

   AA to Prin B101, Principal B101A, Conf B101B, Conf B101G, Conf B101K, Freshman Assist Princ B100C and Teacher Collab B129.

C. Sheet Number IN1A2

1. DELETE AND REPLACE Note 29 with Note 61 in the following Rooms.

   Assist Princ B200C, Conf B200E, Conf B200K, Guidance Hub B200P and Teacher Collab B229.

D. Sheet Number IN1A3

1. DELETE AND REPLACE Note 29 with Note 61 in the following Rooms.

   Assist Prin B300B, Conf B300E, Touchdown Space B300H, My Achievement Center B300J and Teacher Collab B329.

E. Sheet Number IN1B1

1. DELETE AND REPLACE Note 29 with Note 61 in Assist Prin C123.

F. Sheet Number IN1C1

1. DELETE AND REPLACE Note 29 with Note 61 in Bookstore Asst C104 and Project Room C110A.

G. Sheet Number IN1F1

1. DELETE AND REPLACE Note 29 with Note 61 in Athletic Training Room A131.

H. Sheet Number IN1H1

1. DELETE AND REPLACE Note 29 with Note 61 in Concessions J100 and Hospitality K129.

I. Sheet Number IN1J1

1. DELETE AND REPLACE Note 29 with Note 61 in Orchestra M100 and Band M104.

J. Sheet Number IN1K1

1. DELETE AND REPLACE Note 29 with Note 61 in Service Kitchen K118.
2. MODIFY finish tag and add Note 62 as shown below:

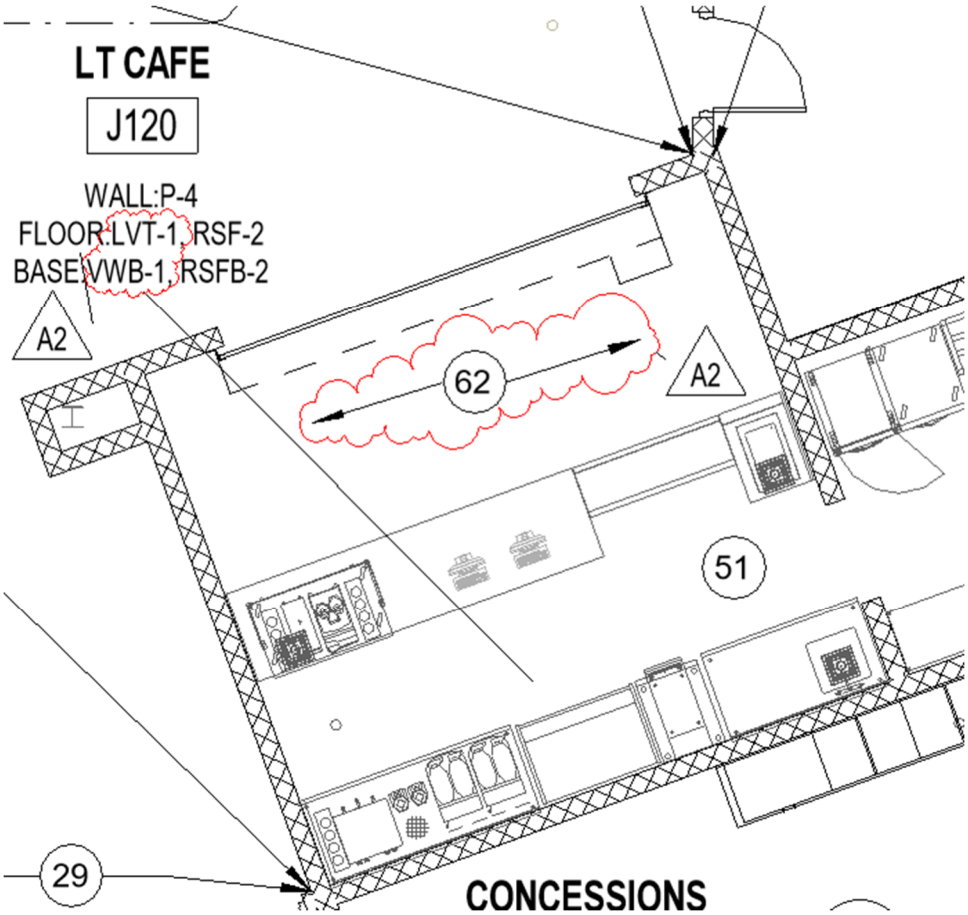

K. Sheet Number I-204

1. MODIFY Elevation 1A as shown below:

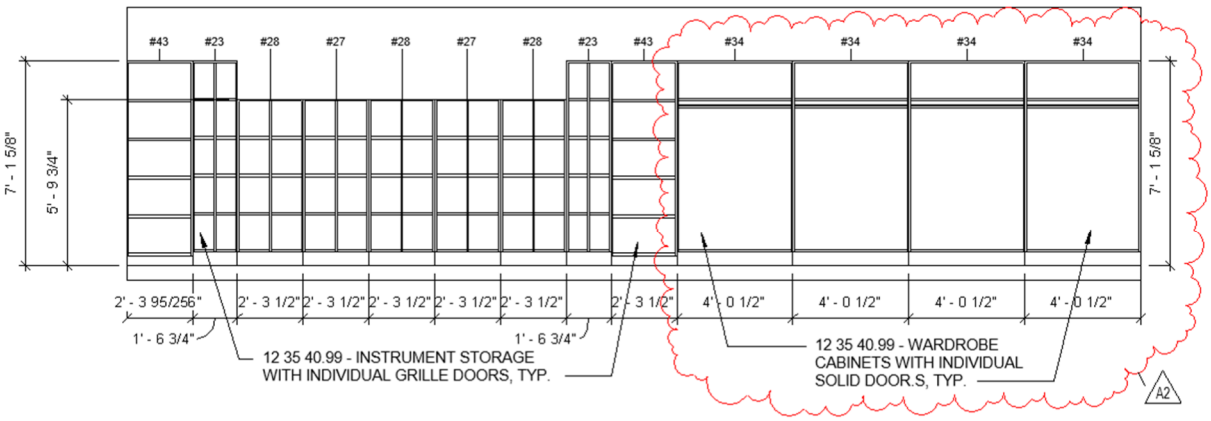

1A ORCHESTRA INSTRUMENT STORAGE ELEVATION 1_CD
1/4" = 1'-0"

2. MODIFY Elevation 1B as shown below:

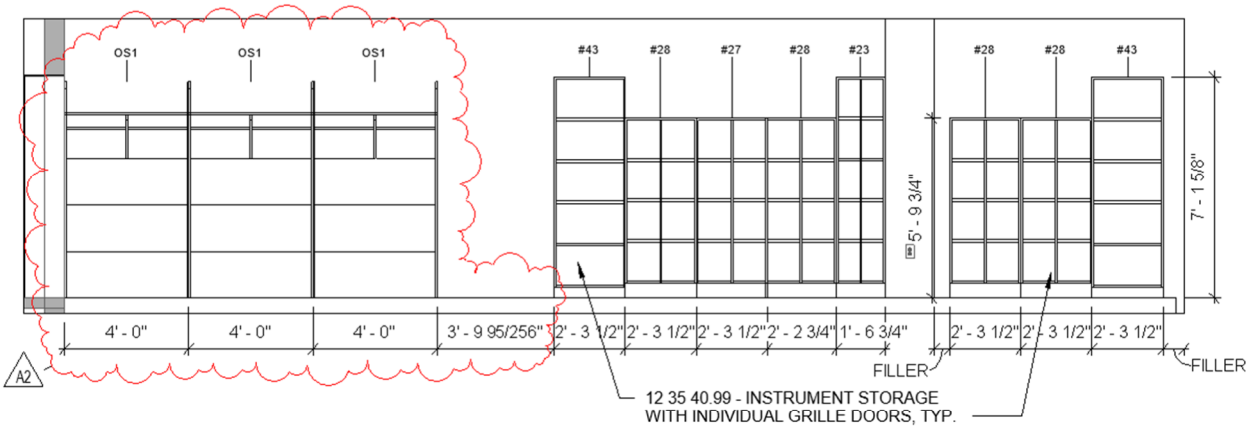

1B ORCHESTRA INSTRUMENT STORAGE ELEVATION 2_CD
1/4" = 1'-0"

3. MODIFY Elevation 1F as shown below:

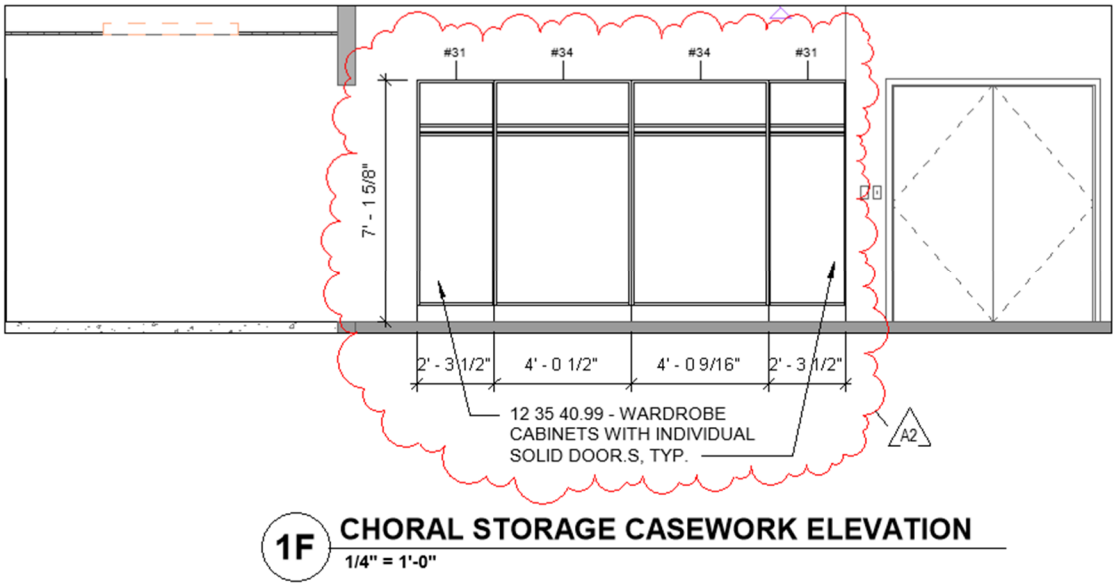

L. Sheet Number I-403

1. ADD Detail 1F as shown below:

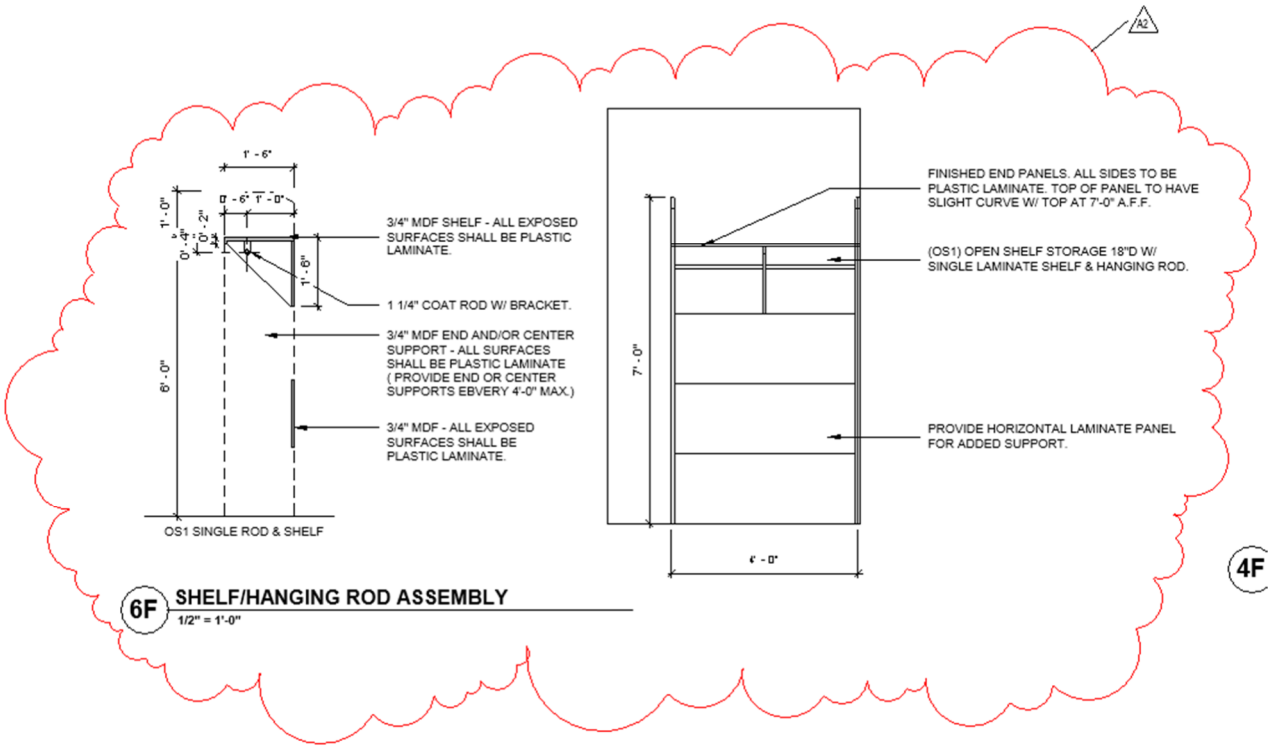

3.5 M-SERIES DRAWINGS

A. Sheet Number MDR101

1. DELETE AND REPLACE drawing MDR101 in its entirety with attached

B. Sheet Number MH1A1

1. ADD duct silencers SA-1 and RA-1 to RTAHU-2 duct system as follows:

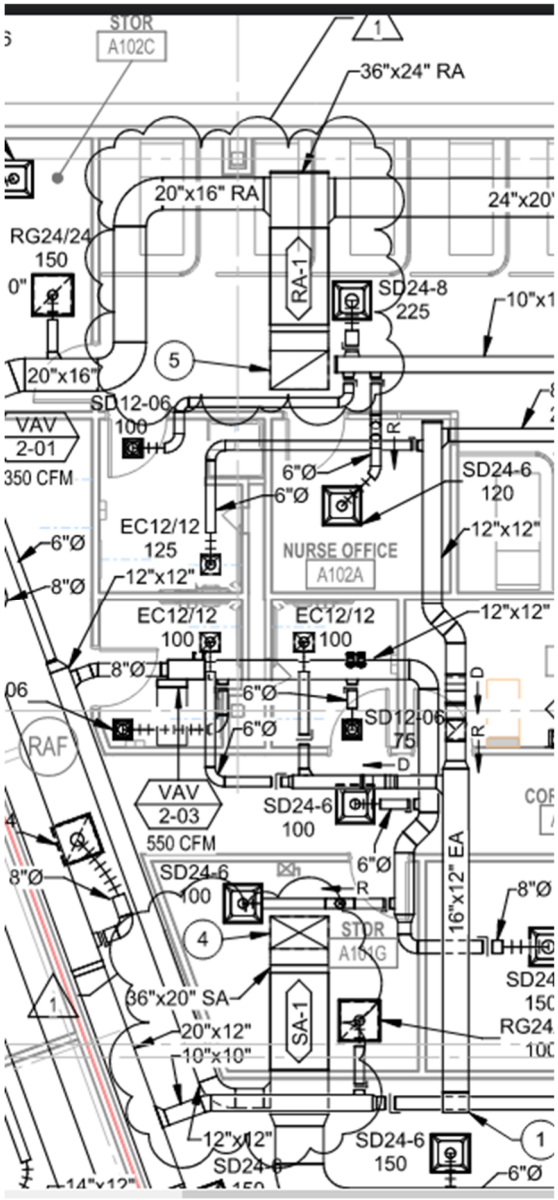

2. ADD duct silencers SA-2, SA-3, RA-2, RA-3, RA-4 to RTAHU-1 duct system as follows:

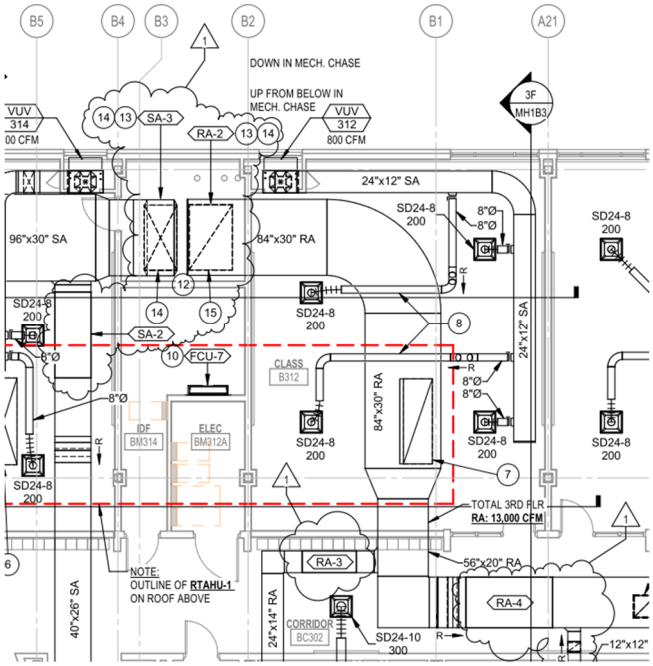

C. Sheet Number MH1B1

1. ADD installation of electric wall heater EUH-1 to Vest BS113A as follows:

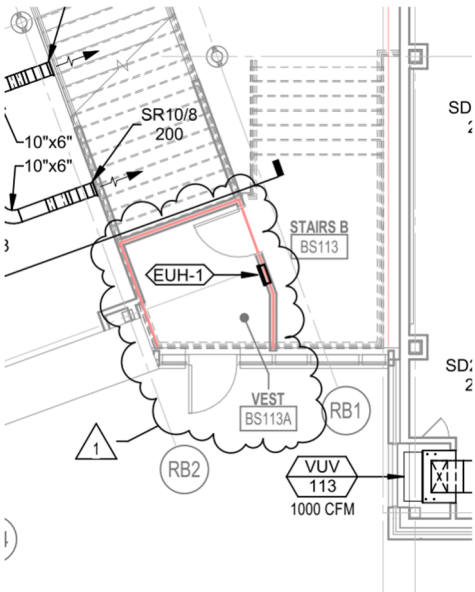

D. Sheet Number MH1F1

1. ADD 50 CFM of exhaust air ducted from room J109 as follows:

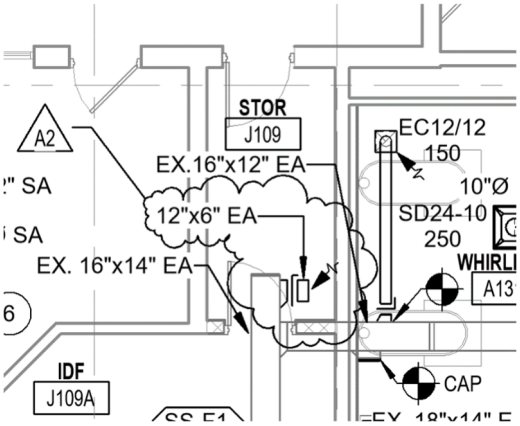

2.

E. Sheet Number MH1J2

1. ADD Plan Piping Notes and General Piping Notes as follows:

A2

GENERAL MECHANICAL PIPING NOTES	
#	NOTE
A	IN THE EVENT THAT ASBESTOS IS ENCOUNTERED DURING CONSTRUCTION, WORK IS TO HALT IMMEDIATELY UNTIL ASBESTOS HAS BEEN ABATED.
B	LIGHT LINES INDICATE EXISTING TO REMAIN ITEMS, AND DARK LINES INDICATE NEW WORK.

MECHANICAL PIPING PLAN NOTES	
#	NOTE
1	VALVE AND CAP MAIN PIPING FOR FUTURE ADDITION.
2	CONDENSATE DRAIN PIPING TO TURN DOWN TO FLOOR DRAIN. TERMINATE 1'-0" ABOVE FINISHED FLOOR WITH TEE FITTING.
3	SEE SHEET MP1A1 FOR CONTINUATION
4	SEE SHEET MP1D1 FOR CONTINUATION.
5	SEE SHEET MP1F1 FOR CONTINUATION.
6	SEE SHEET MP1E1 FOR CONTINUATION.
7	SEE SHEET MP1B1 FOR CONTINUATION.
8	SEE SHEET MP1G1 FOR CONTINUATION.
9	SEE SHEET MP1C1 FOR CONTINUATION.
10	SEE SHEET MP1J1 FOR CONTINUATION.
11	CONNECT TERMINAL BOX TO EXISTING PIPING. INSTALL ALL PIPING ACCESSORIES AS CALLED FOR IN 3-WAY COIL PIPING DETAIL ON M-502.
12	CONNECT TERMINAL BOX TO EXISTING PIPING. INSTALL ALL PIPING ACCESSORIES AS CALLED FOR IN 2-WAY COIL PIPING DETAIL ON M-502.
13	SIZE REFRIGERANT PIPING PER MANUFACTURER'S RECOMMENDATION BASED ON TOTAL EQUIVALENT LENGTH.
14	VAU-3-33 IS COOLING ONLY.
15	VALVE OFF PIPING IN PREPARATION FOR FUTURE HYDRONIC EQUIPMENT PART OF POOL ADDITION.
16	RECONNECT EXISTING BRANCH PIPING TO NEW MAINS.
17	ROUTE CONDENSATE TO COMBINE AND DISCHARGE INTO FLOOR DRAIN BENEATH ICE MACHINE.

F. Sheet Number MH1J1

1. MODIFY supply branch ductwork by eliminating supply ducts to rooms JM116 & JM114 as follows:

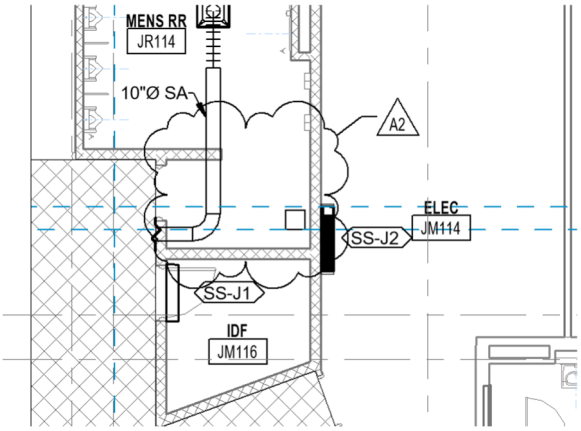

G. All HVAC Sheets: Sheet Number MH1A1 - MH1B3

1. ADD General Note D as follows and shown below:

   "D. Paintable ductwork in spaces where ductwork is exposed."

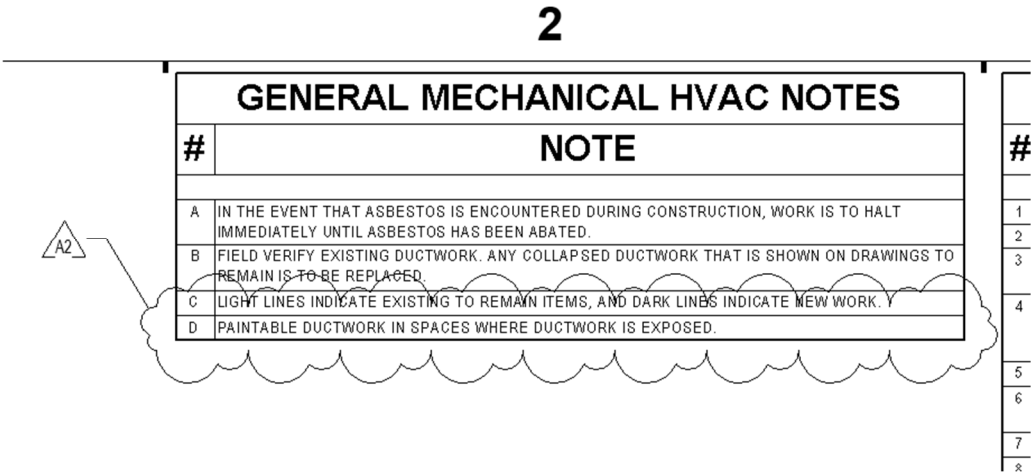

2

GENERAL MECHANICAL HVAC NOTES

#	NOTE
A	IN THE EVENT THAT ASBESTOS IS ENCOUNTERED DURING CONSTRUCTION, WORK IS TO HALT IMMEDIATELY UNTIL ASBESTOS HAS BEEN ABATED.
B	FIELD VERIFY EXISTING DUCTWORK. ANY COLLAPSED DUCTWORK THAT IS SHOWN ON DRAWINGS TO REMAIN IS TO BE REPLACED.
C	LIGHT LINES INDICATE EXISTING TO REMAIN ITEMS, AND DARK LINES INDICATE NEW WORK.
D	PAINTABLE DUCTWORK IN SPACES WHERE DUCTWORK IS EXPOSED.

A2

H. Sheet Number MH1D1

1. MODIFY Kiln area HVAC to add a second Vent-a-kiln hood and revise hood exhaust fans per the following three plan revision clips:

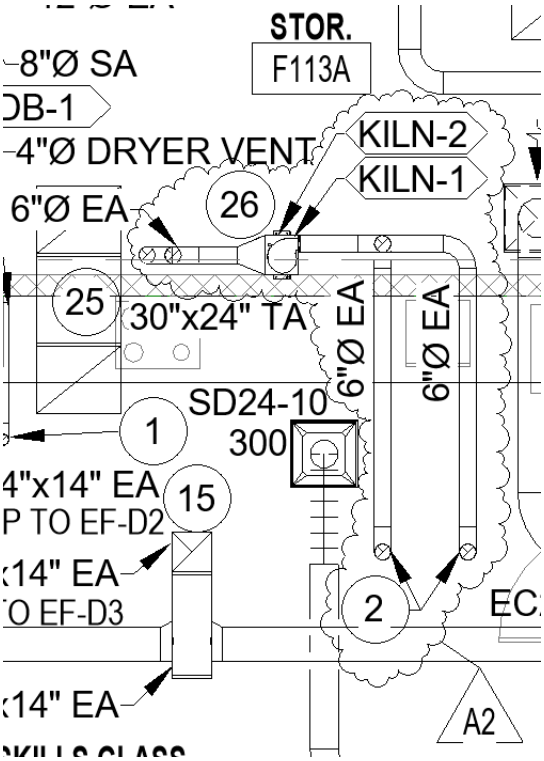

26	ROUTE KILN EXHAUST DUCT TO KILN HOOD. TYP 2. SEE DETAIL 1E/M-503. SEE ISOMETRIC VIEW 7E ON THIS SHEET.

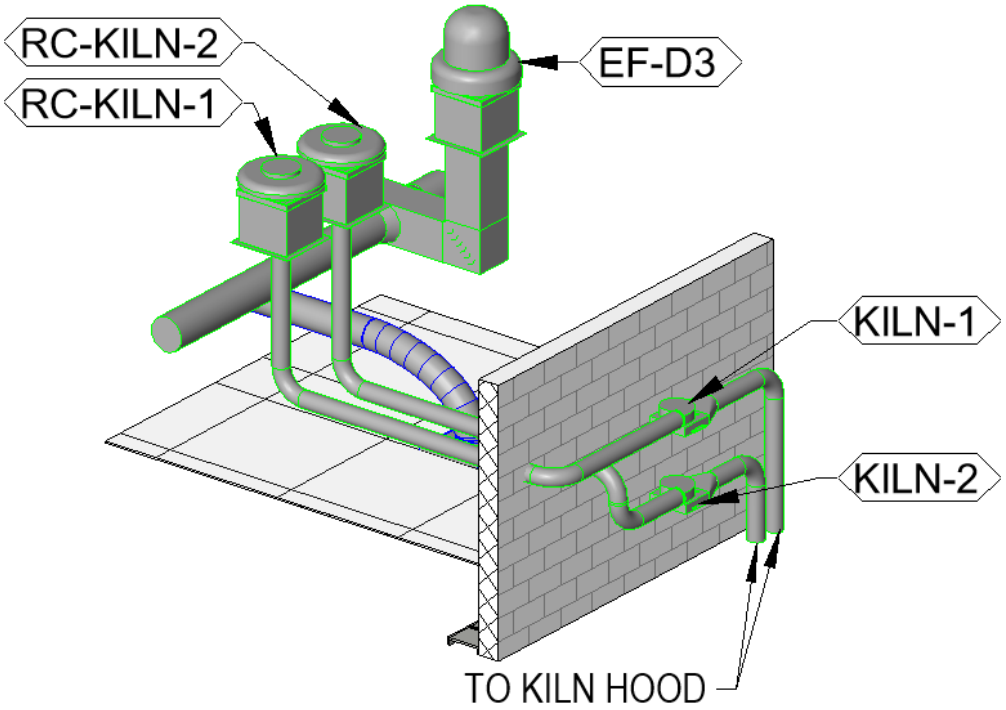

I. Sheet Number MP1F1

1. MODIFY heating water piping by increasing branch piping size to 8” and tie in existing field house piping as revised in the following sketch:

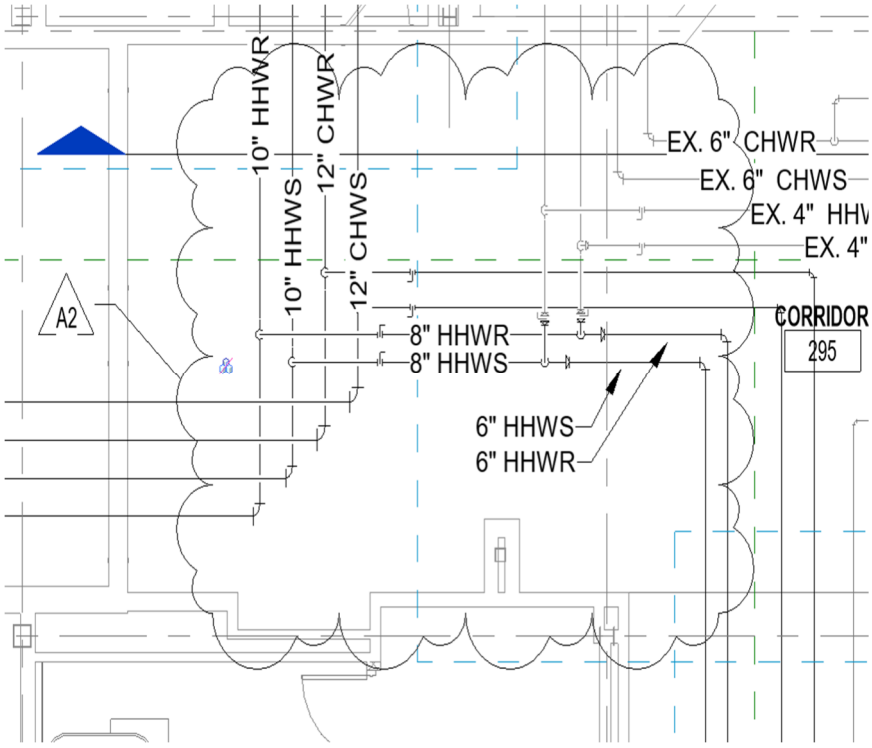

J. Sheet Number MR102

1. ADD RC-KILN-2 as revised in the following:

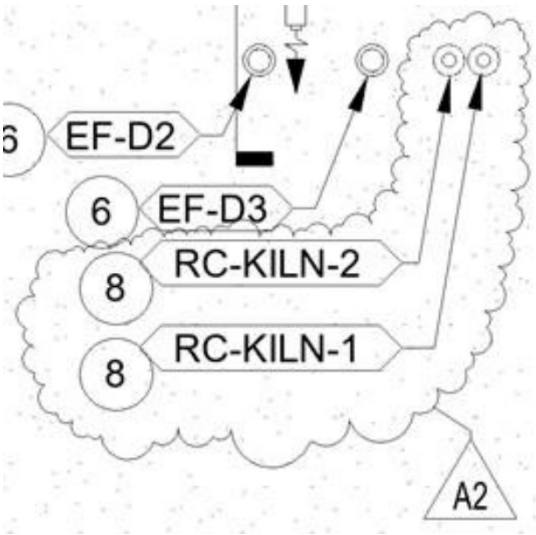

K. Sheet Number M-503

1. MODIFY Detail 1E "Vent-a-kiln system detail", Note #2 as revised in the following:

2) NON-EXPLOSION PROOF BLOWER LIKE COOK MODEL CP6D17.
- 1/3 HP, 120V/1PH MOTOR.
- 500 CFM @ 0.5" W.G., 1,725 RPM.
- MAXIMUM CONTINOUS MOTOR TEMPERATURE 250 ºF .
- SOUND DATA, APPROXIMATE DB AT 5 FEET HIGH: 68 DB, LOW 54 DB.

A2

L. Sheet Number M-506

1. DELETE Detail 6A in its entirety

M. Sheet Number M-603

1. MODIFY Fan Schedule and Gravity Ventilator Schedule. EF "Kiln" is changed to "Kiln-1" and "Kiln-2" is added. EF basis of design is changed to Cook model. Gravity Vent "RC-KILN" is changed to "RC-KILN-1". And "RC-KILN-2" is added, as follows:

FAN SCHEDULE

IDENTITY DATA						FAN DATA					NOISE CRITERIA		ELECTRICAL DATA							
MARK	MANUFACTURER	MODEL	SERVES	WEIGHT (LBS)	LOCATION	FAN TYPE	DRIVE TYPE	EXHAUST AIRFLOW (CFM)	ESP (IN-WG)	RPM	SONES	DBA	HP	BHP	VOLTS (V)	PHASE	FREQ (HZ)	DISCONNECT PROVIDER	UNIT CONTROL	NOTE
DB-1	TJERNLUND	LB2	C128 - APPLIED SKILLS CLASSROOM	25	APPLIED SKILLS STUDIO C124C	DRYER BOOSTER	DIRECT	160		3000					120	1	60	RECEPTACLE	ON-BOARD CONTROLLER	2,6
EF-C1	LOREN COOK	90C15DH	G100 - CUSTODIAL	28	ROOF	DOWNBLAST CENTRIFUGAL	DIRECT	400	0.5	1549	8	56	0.13	0.12	120	1	60	MANUFACTURER	FAN SPEED CONTROLLER	1,4,5
EF-C2	LOREN COOK	135C15D	GR102 - RR	72	ROOF	DOWNBLAST CENTRIFUGAL	DIRECT	1,520	0.5	1250	10.9	61	0.5	0.25	120	1	60	MANUFACTURER	FAN SPEED CONTROLLER	1,4,5
EF-C3	LOREN COOK	90C15DH	J123C - STOR.	28	ROOF	DOWNBLAST CENTRIFUGAL	DIRECT	375	0.5	1517	7.6	55	0.13	0.12	120	1	60	MANUFACTURER	FAN SPEED CONTROLLER	1,4,5
EF-C4	LOREN COOK	120C15D	FR105 - RR	67	ROOF	DOWNBLAST CENTRIFUGAL	DIRECT	690	0.5	1113	6.1	52	0.25	0.09	120	1	60	MANUFACTURER	FAN SPEED CONTROLLER	1,4,5
EF-D1	LOREN COOK	90C15DH	CR128 - FAMILY RR	28	ROOF	DOWNBLAST CENTRIFUGAL	DIRECT	300	0.5	1443	6.9	53	0.13	0.06	120	1	60	MANUFACTURER	FAN SPEED CONTROLLER	1,4,5
EF-D2	LOREN COOK	120C13D	F115 - ARTS CLASS	67	ROOF	DOWNBLAST CENTRIFUGAL	DIRECT	850	0.5	1172	7	54	0.25	0.11	120	1	60	MANUFACTURER	1 HR TIMER WALL SWITCH	4,5
EF-D3	LOREN COOK	135C13D	F113A - STOR.	72	ROOF	DOWNBLAST CENTRIFUGAL	DIRECT	1,350	0.5	1161	9.1	58	0.5	0.2	120	1	60	MANUFACTURER	FAN SPEED CONTROLLER	1,4,5
EF-D4	LOREN COOK	120C15D	F113A - STOR.	67	ROOF	DOWNBLAST CENTRIFUGAL	DIRECT	950	0.5	1227	7.8	56	0.25	0.13	120	1	60	MANUFACTURER	LINE VOLTAGE THERMOSTAT	4,5
EF-D5	LOREN COOK	120C13D	F113 - CERAMICS ART CLASS	67	ROOF	DOWNBLAST CENTRIFUGAL	DIRECT	850	0.5	1172	7	54	0.25	0.11	120	1	60	MANUFACTURER	1 HR TIMER WALL SWITCH	4,5
EF-D6	LOREN COOK	120C13D	F111 - ART CLASS	67	ROOF	DOWNBLAST CENTRIFUGAL	DIRECT	850	0.5	1172	7	54	0.25	0.11	120	1	60	MANUFACTURER	1 HR TIMER WALL SWITCH	4,5
EF-G1	LOREN COOK	120C13D	F114 - ART CLASS	67	ROOF	DOWNBLAST CENTRIFUGAL	DIRECT	850	0.5	1172	7	54	0.25	0.11	120	1	60	MANUFACTURER	1 HR TIMER WALL SWITCH	4,5
EF-G2	LOREN COOK	120C15D	F110A - STOR.	67	ROOF	DOWNBLAST CENTRIFUGAL	DIRECT	1,125	0.5	1349	9.4	59	0.25	0.17	120	1	60	MANUFACTURER	FAN SPEED CONTROLLER	1,4,5
EF-G3	LOREN COOK	120C13D	F112 - ART CLASS	67	ROOF	DOWNBLAST CENTRIFUGAL	DIRECT	850	0.5	1172	7	54	0.25	0.11	120	1	60	MANUFACTURER	1 HR TIMER WALL SWITCH	1,4,5
EF-G4	LOREN COOK	101C15D	H109 - FACS CLASS	30	ROOF	DOWNBLAST CENTRIFUGAL	DIRECT	600	0.5	1508	8.5	57	0.13	0.1	120	1	60	MANUFACTURER	1 HR TIMER WALL SWITCH	4,5
EF-H2	LOREN COOK	120C15D	KR100D - WOMENS RR	67	ROOF	DOWNBLAST CENTRIFUGAL	DIRECT	1,200	0.5	1399	10	60	0.25	0.2	120	1	60	MANUFACTURER	FAN SPEED CONTROLLER	1,4,5
EF-J1	LOREN COOK	120C15D	MR101 - MEN'S	67	ROOF	DOWNBLAST CENTRIFUGAL	DIRECT	950	0.5	1227	7.8	56	0.25	0.13	120	1	60	MANUFACTURER	FAN SPEED CONTROLLER	1,4,5
EF-J2	LOREN COOK	90C15DH	MR103B - RR	28	ROOF	DOWNBLAST CENTRIFUGAL	DIRECT	150	0.5	1312	5.7	50	0.13	0.1	120	1	60	MANUFACTURER	FAN SPEED CONTROLLER	1,4,5
EF-J3	LOREN COOK	90C15DH	J112D - TUNNEL ENTRY	28	ROOF	DOWNBLAST CENTRIFUGAL	DIRECT	340	0.5	1480	7.3	54	0.13	0.11	120	1	60	MANUFACTURER	FAN SPEED CONTROLLER	1,4,5
EF-J4	LOREN COOK	180C10D	J112 - CUSTODIAL/MAINTENANCE	102	ROOF	DOWNBLAST CENTRIFUGAL	DIRECT	3,010	0.5	1075	12.4	63	0.75	0.56	208	3	60	MANUFACTURER	FAN SPEED CONTROLLER	1,4,5
EF-J5	LOREN COOK	90C15DH	JR112B - FACULTY MENS	28	ROOF	DOWNBLAST CENTRIFUGAL	DIRECT	300	0.5	1443	6.9	53	0.13	0.11	120	1	60	MANUFACTURER	FAN SPEED CONTROLLER	1,4,5
EF-K1	LOREN COOK	120C15D	JR116 - WOMENS RR	67	ROOF	DOWNBLAST CENTRIFUGAL	DIRECT	975	0.5	1243	8.1	56	0.25	0.13	120	1	60	MANUFACTURER	FAN SPEED CONTROLLER	1,4,5
EF-K2	LOREN COOK	90C15DH	J118 - SERVICE KITCHEN	28	ROOF	DOWNBLAST CENTRIFUGAL	DIRECT	375	0.5	1517	7.6	55	0.13	0.12	120	1	60	MANUFACTURER	OCCUPANCY SENSOR	4,5
EF-K3	LOREN COOK	90C15DH	J122G - LOCKERS	28	ROOF	DOWNBLAST CENTRIFUGAL	DIRECT	150	0.5	1312	5.7	50	0.13	0.1	120	1	60	MANUFACTURER	FAN SPEED CONTROLLER	1,4,5
EF-K4	LOREN COOK	90C15DH	J118B - CONCESSIONS	28	ROOF	DOWNBLAST CENTRIFUGAL	DIRECT	250	0.5	1397	6.5	52	0.13	0.11	120	1	60	MANUFACTURER	OCCUPANCY SENSOR	4,5
EF-K5	LOREN COOK	90C15DH	J120A - LT CAFE	28	ROOF	DOWNBLAST CENTRIFUGAL	DIRECT	250	0.5	1397	6.5	52	0.13	0.11	120	1	60	MANUFACTURER	OCCUPANCY SENSOR	4,5
EF-L1	LOREN COOK	90C15DH	638 - RR	28	ROOF	DOWNBLAST CENTRIFUGAL	DIRECT	350	0.3	1260	6	51	0.13	0.1	120	1	60	MANUFACTURER	FAN SPEED CONTROLLER	1,4,5
EX. EF-B5	LOREN COOK	120C13D	LC100 - CORRIDOR	67	ROOF	DOWNBLAST CENTRIFUGAL	DIRECT	900	0.5	1198	7.4	55	0.25	0.12	120	1	60	MANUFACTURER	FAN SPEED CONTROLLER	1,4,5
KILN-1	LOREN COOK	CP6D17	KILN 1	17	STOR F113A	FORWARD CURVED CENTRIFUGAL BLOWER	DIRECT	500	0.5	1725	0	68	0.33	0.3	120	1	60	RECEPTACLE	MINI PROGRAMMABLE TIMER	3
KILN-2	LOREN COOK	CP6D17	KILN 2	17	STOR F113A	FORWARD CURVED CENTRIFUGAL BLOWER	DIRECT	500	0.5	1725	0	68	0.33	0.3	120	1	60	RECEPTACLE	MINI PROGRAMMABLE TIMER	3

GRAVITY VENTILATOR SCHEDULE

IDENTITY DATA						HOOD DATA			THROAT DATA				
MARK	MANUFACTURER	MODEL	LOCATION	SYSTEM SERVED	WEIGHT (LBS)	AIRFLOW (CFM)	TSP (IN-WG)	HOOD VELOCITY (FPM)	THROAT VELOCITY (FPM)	DIMENSIONS L	W	DIA	NOTES
GI-FCU-F1	LOREN COOK	PR	ROOF	FCU-F1	80	800	0.1	250	540	0"	0"	16"	1
GI-FCU-K1	LOREN COOK	PR	ROOF	FCU-K1	80	1800	0.1	339	785	0"	0"	20"	1
GI-FCU-K2	LOREN COOK	PR	ROOF	FCU-K2	30	600	0.1	294	704	0"	0"	12"	1
GR-AHU-5	LOREN COOK	GI	ROOF	AHU-5	296	16500	0.18	906	761	84"	30"		1
GR-AHU-6	LOREN COOK	GI	ROOF	AHU-6	236	11000	0.125	1,000	786	84"	24"		1
GR-AHU-8	LOREN COOK	GR	ROOF	AHU-8	500	8500	0.02	405	405	84"	36"		2
GR-AHU-9	LOREN COOK	GI	ROOF	AHU-5	296	16500	0	906	0	84"	30"		1
RC-KILN-1	LOREN COOK	PR	ROOF	KILN	30	450	0.1	220	528	0"	0"	12"	1
RC-KILN-2	LOREN COOK	PR	ROOF	KILN	30	450	0.1	220	528	0"	0"	12"	1

GRA
1. 2

A2

N. Sheet Number M-603

1. ADD schedule note 3. To "HOT WATER FINNED TUBE RADIATION SCHEDULE" and apply to all scheduled tags as follows:

"3. Provide optional front panel to protect touchable surfaces"

O. Sheet Number M-604

1. DELETE AND REPLACE "Rooftop Mounted AHU Schedule" note 10 as follows:

"10. Reference specification section 237416.13"

P. Sheet Number M-604

1. DELETE Vertical Unit Ventilator schedule note 10 in its entirety.

3.6 P-SERIES DRAWINGS

A. Sheet Number PP1L1

1. Delete and replace sheet.

B. Sheet Number P-501

1. Modify Detail 1B as seen below:

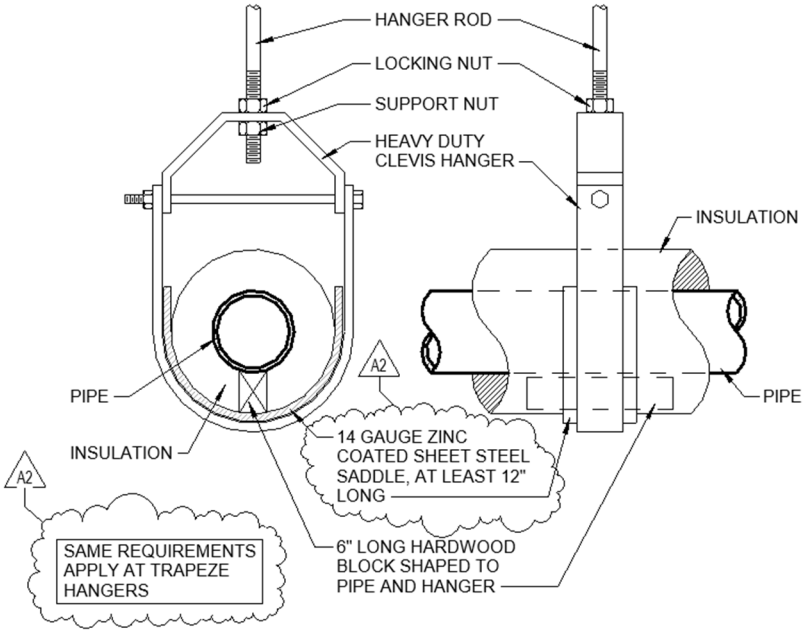

1B PIPE HANGER (6" & SMALLER) DETAIL
NOT TO SCALE

2. Modify Detail 2B as seen below:

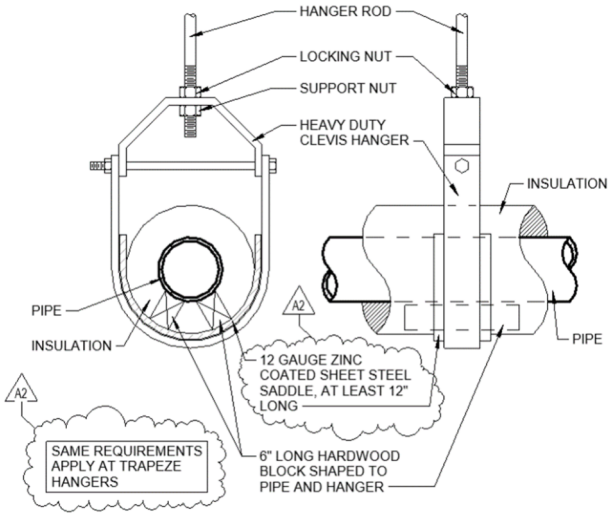

2B PIPE HANGERS (8" & LARGER) DETAIL
NOT TO SCALE

C. Sheet Number P-601

1. Delete and replace sheet.

D. Sheet Number P-909

1. Modify Detail 4A as seen below:

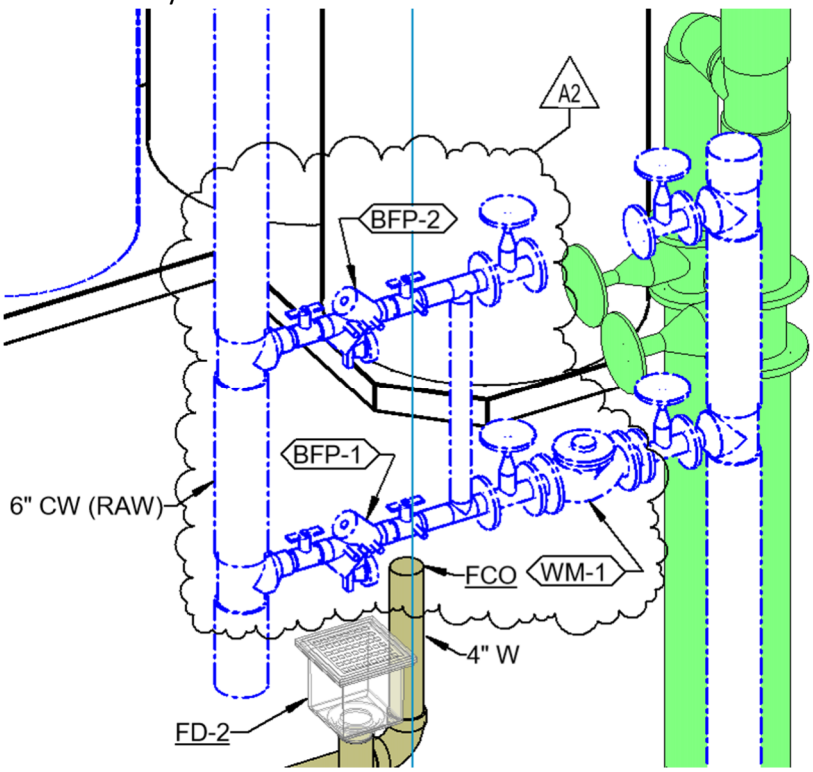

3.7 E-SERIES DRAWINGS

A. Sheet Number ES102

1. DELETE AND REPLACE Drawing ES102 in its entirety.

B. Sheet Number EL1A1

1. MODIFY Drawing EL1A1 as follows:

   a. Building mounted exterior light fixtures in this area controlled by lighting contactor LC-1B.

C. Sheet Number EL1B1

1. MODIFY Drawing EL1B1 as follows:

   a. Building mounted exterior light fixtures in this area controlled by lighting contactor LC-1B.

   b. In STOR BM112 replace type L15 strip fixtures with type L1 recessed flat panel fixtures.

c. Outside ELEC BM120A provide type L56 light fixture over exterior exit door with lighting plan note 13, 'INSTALL FIXTURE ON WALL +8'-0" A.F.F. TO CENTERLINE OF FIXTURE, CENTERED ON AND DIRECTLY ABOVE DOOR.' Circuit through emergency exterior lighting circuit for the area and control through lighting contactor LC-1B.

D. Sheet Number EL1C1

1. MODIFY Drawing EL1C1 as follows:

   a. In ELEC CM100 provide lighting contactor LC-1C for control of building mounted and site pole lighting on east side of building.

   b. Remove light fixtures and controls previously provided for west entrance vestibule.

E. Sheet Number EL1D1

1. DELETE AND REPLACE Drawing EL1D1 in its entirety:

2. MODIFY Drawing EL1D1 as follows:

   a. In ASST. PRIN. C123 provide five (5) type L7 light fixtures circuited to local normal power lighting circuit and one (1) type L7S light fixture circuited to local emergency power lighting circuit. Provide single wall switch and ceiling occupancy sensor in room for controls.

   b. Outside VEST CV102 provide one (1) type L56 light fixture over 3 feet wide exterior exit door and two (2) type L57 light fixtures over 6 feet wide exterior exit doors each with lighting plan note 12, 'INSTALL FIXTURE ON FACE OF HORIZONTAL MULLION CENTERED ON AND DIRECTLY ABOVE DOOR. CONCEAL MC CABLE TO FIXTURE WITHIN DOOR FRAMING, WITH NO CABLING OR JUNCTION BOXES EXPOSED.' Circuit through emergency exterior lighting circuit for the area and control through lighting contactor LC-1B.

   c. In rooms ARTS LAB F115 and CERAMICS LAB F113 replace type L13 and L13S strip fixtures with type L10 and L10S recessed flat panel fixtures.

   d. In rooms ARTS LAB F115 and CERAMICS LAB F113 replace type X1W wall mount exit signs at northern double doors with type X1C ceiling mount exit signs.

   e. Outside ARTS LAB F115 provide type L56 light fixture over exterior exit door with lighting plan note 13, 'INSTALL FIXTURE ON WALL +8'-0" A.F.F. TO CENTERLINE OF FIXTURE, CENTERED ON AND DIRECTLY ABOVE DOOR.' Circuit through emergency exterior lighting circuit for the area and control through lighting contactor LC-1B.

   f. Outside APPLIED SKILLS CLASS C128 provide type L56 light fixture over exterior exit door with lighting plan note 13, 'INSTALL FIXTURE ON WALL +8'-0" A.F.F. TO CENTERLINE OF FIXTURE, CENTERED ON AND DIRECTLY ABOVE DOOR.' Circuit through emergency exterior lighting circuit for the area and control through lighting contactor LC-1B.

g. Outside WORK GALLERY FC102 provide one (1) type L57 light fixture over exterior exit door with lighting plan note 12, 'INSTALL FIXTURE ON FACE OF HORIZONTAL MULLION CENTERED ON AND DIRECTLY ABOVE DOOR. CONCEAL MC CABLE TO FIXTURE WITHIN DOOR FRAMING, WITH NO CABLING OR JUNCTION BOXES EXPOSED.' Circuit through emergency exterior lighting circuit for the area and control through lighting contactor LC-1B.

F. Sheet Number EL1J1

1. MODIFY Drawing EL1D1 as follows:

   a. Relocate lighting contactor LC-1J from STOR M101B to ELECTRICAL JM112.

G. Sheet Number EP1A1

1. MODIFY Drawing EP1A1 as follows:

   a. In room ELEC BM100, provide disconnect switch DS-1AFCU2, wiring, raceways, and connections for FCU-2 with power plan note 16 'DISCONNECT SWITCH FOR FAN COIL UNIT SPLIT SYSTEM. REFER TO ROOF PLANS FOR LOCATION OF CORRESPONDING DISCONNECT SWITCH.' Connect through CU-2 on roof.
   b. In room ELEC BM100 provide combination motor starter MS-1ACP1, wiring, raceways, and connections for circulation pump CP-1 above ceiling of RR AR101.
   c. In room ELEC BM100 provide combination motor starter MS-1ACP2, wiring, raceways, and connections for circulation pump CP-2 above ceiling of RR AR101.
   d. In room STOR A101G provide toggle switch MS-1AEF2, wiring, raceways, and connections for exhaust fan EF-2 on roof.
   e. In room IDF AM101 provide disconnect switch DS-1AFCU1, wiring, raceways, and connections for FCU-1 with power plan note 16 'DISCONNECT SWITCH FOR FAN COIL UNIT SPLIT SYSTEM. REFER TO ROOF PLANS FOR LOCATION OF CORRESPONDING DISCONNECT SWITCH.' Connect through CU-1 on roof.
   f. In room ELEC BM100 provide panelboard 12AEQ1 (208Y/120V, 3Φ, 4W, 60A MCB, 30 spaces), transformer T-1AEQ1 (15 kVA, 480V primary, 208Y/120V secondary), fused disconnect switch DS-T1AEQ1, wiring, raceways, circuit breakers, fuses, and connections for emergency equipment branch power for circulation pumps CP-1, CP-2, CP-3, and CP-4.
   g. Provide duct smoke detectors for supply and return sides of RTAHU-1.

H. Sheet Number EP1B1

1. MODIFY Drawing EP1B1 as follows:

   a. In room CUST B125 provide FVNR combination motor starter MS-1BEF1, wiring, raceways, and connections for exhaust fan EF-1 on roof.
   b. In room IDF BM114 provide disconnect switch DS-1BFCU4, wiring, raceways, and connections for FCU-4 with power plan note 16 'DISCONNECT SWITCH FOR FAN COIL UNIT SPLIT SYSTEM. REFER TO ROOF PLANS FOR LOCATION OF CORRESPONDING DISCONNECT SWITCH.' Connect through CU-4 on roof.

c. In room ELEC BM120A provide disconnect switch DS-1BFCU3, wiring, raceways, and connections for FCU-3 with power plan note 16 'DISCONNECT SWITCH FOR FAN COIL UNIT SPLIT SYSTEM. REFER TO ROOF PLANS FOR LOCATION OF CORRESPONDING DISCONNECT SWITCH.' Connect through CU-3 on roof.
d. In ELEC BM120A provide horn strobe device at standard mounting height above wall manual pull station.
e. In room SCIENCE PREP B117A provide toggle switch MS-1BEF6, wiring, raceways, and connections for exhaust fan EF-6 on roof.
f. Connect 208V and 120V circuits in room SCIENCE LAB B115 to panelboard 12B5.

I. Sheet Number EP1G1

1. DELETE AND REPLACE Drawing EP1G1 in its entirety:

J. Sheet Number EP1L1

1. MODIFY Drawing EP1L1 as follows:

a. In BOILER ROOM L100 provide GFCI duplex receptacle for water softener WS-2 on dedicated circuit out of panelboard 12L1. Coordinate location with P-Series drawings.

K. Sheet Number EP1A2

1. MODIFY Drawing EP1A2 as follows:

a. In ELEC BM200 provide transformer T-2ALS1 and circuit to disconnect switch DS-1B1 for ELEV B BS101 elevator cab lighting.

L. Sheet Number EP1B2

1. MODIFY Drawing EP1B2 as follows:

a. In room SCIENCE PREP B217A provide toggle switch MS-2BEF3, wiring, raceways, and connections for exhaust fan EF-3 on roof.
b. In room SCIENCE PREP B217A provide toggle switch MS-2BEF4, wiring, raceways, and connections for exhaust fan EF-4 on roof.
c. In room SCIENCE PREP B217A provide toggle switch MS-2BEF5, wiring, raceways, and connections for exhaust fan EF-5 on roof.
d. Connect 208V and 120V circuits in room SCIENCE LAB B215 to panelboard 22B5.
e. Connect 208V and 120V circuits in room IDF BM214 to panelboard 22BT.
f. In room IDF BM214 provide disconnect switch DS-2BFCU5, wiring, raceways, and connections for FCU-5 with power plan note 16 'DISCONNECT SWITCH FOR FAN COIL UNIT SPLIT SYSTEM. REFER TO ROOF PLANS FOR LOCATION OF CORRESPONDING DISCONNECT SWITCH.' Connect through CU-5 on roof.

M. Sheet Number EP1A3

1. MODIFY Drawing EP1A3 as follows:

a. Connect 208V and 120V circuits in room IDF BM300 to panelboard 32AT.

b. In room IDF BM300 provide disconnect switch DS-3AFCU6, wiring, raceways, and connections for FCU-6 with power plan note 16 'DISCONNECT SWITCH FOR FAN COIL UNIT SPLIT SYSTEM. REFER TO ROOF PLANS FOR LOCATION OF CORRESPONDING DISCONNECT SWITCH.' Connect through CU-6 on roof.

N. Sheet Number EP1B3

1. MODIFY Drawing EP1B3 as follows:

   a. Connect 208V and 120V circuits in room SCIENCE LAB B315 to panelboard 32B5.
   b. Connect 208V and 120V circuits in room IDF BM314 to panelboard 32BT.
   c. In room IDF BM314 provide disconnect switch DS-3BFCU7, wiring, raceways, and connections for FCU-7 with power plan note 16 'DISCONNECT SWITCH FOR FAN COIL UNIT SPLIT SYSTEM. REFER TO ROOF PLANS FOR LOCATION OF CORRESPONDING DISCONNECT SWITCH.' Connect through CU-7 on roof.
   d. Provide duct smoke detectors for supply and return sides of RTAHU-1.

O. Sheet Number ER1AB

1. MODIFY Drawing ER1AB as follows:

   a. For RTAHU-2 provide fused disconnect switches DS-RARTAHU2RF (return fan), DS-RARTAHU2SF (supply fan), wiring, raceways, and connections with roof plan note 9 'CIRCUIT CONNECTION TO ROOFTOP AIR HANDLING UNIT. CONNECT THROUGH VFDS FURNISHED BY TEMPERATURE CONTROL CONTRACTOR. COORDINATE LOCATIONS WITH EQUIPMENT.'
   b. Connect circuit through manufacturer provided disconnect switch to exhaust fan EF-2 from toggle switch MS-1AEF2.
   c. For CU-1 provide disconnect switch DS-RACU1, wiring, raceways, and connections with roof plan note 3 'DISCONNECT SWITCH FOR FAN COIL UNIT SPLIT SYSTEM. REFER TO POWER PLANS FOR LOCATION OF CORRESPONDING FAN COIL UNIT. INSTALL WIRING BETWEEN CONDENSING UNIT AND FAN COIL UNIT COMPLETE.' Connect to FCU-1 through DS-1AFCU1 in room IDF AM101.
   d. For CU-2 provide disconnect switch DS-RACU2, wiring, raceways, and connections with roof plan note 3 'DISCONNECT SWITCH FOR FAN COIL UNIT SPLIT SYSTEM. REFER TO POWER PLANS FOR LOCATION OF CORRESPONDING FAN COIL UNIT. INSTALL WIRING BETWEEN CONDENSING UNIT AND FAN COIL UNIT COMPLETE.' Connect to FCU-2 through DS-1AFCU2 in room ELEC BM100.
   e. For CU-3 provide disconnect switch DS-RBCU3, wiring, raceways, and connections with roof plan note 3 'DISCONNECT SWITCH FOR FAN COIL UNIT SPLIT SYSTEM. REFER TO POWER PLANS FOR LOCATION OF CORRESPONDING FAN COIL UNIT. INSTALL WIRING BETWEEN CONDENSING UNIT AND FAN COIL UNIT COMPLETE.' Connect to FCU-3 through DS-1BFCU3 in room ELEC BM120A.
   f. For RTAHU-1 provide fused disconnect switches DS-RBRTAHU1RF (return fan), DS-RBRTAHU1SF (supply fan), wiring, raceways, and connections with roof plan note 9 'CIRCUIT CONNECTION TO ROOFTOP AIR HANDLING UNIT. CONNECT THROUGH VFDS FURNISHED BY TEMPERATURE CONTROL CONTRACTOR. COORDINATE LOCATIONS WITH EQUIPMENT.'

g. For CU-4 provide disconnect switch DS-RBCU4, wiring, raceways, and connections with roof plan note 3 'DISCONNECT SWITCH FOR FAN COIL UNIT SPLIT SYSTEM. REFER TO POWER PLANS FOR LOCATION OF CORRESPONDING FAN COIL UNIT. INSTALL WIRING BETWEEN CONDENSING UNIT AND FAN COIL UNIT COMPLETE.' Connect to FCU-4 through DS-1BFCU4 in room IDF BM114.
h. For CU-5 provide disconnect switch DS-RBCU5, wiring, raceways, and connections with roof plan note 3 'DISCONNECT SWITCH FOR FAN COIL UNIT SPLIT SYSTEM. REFER TO POWER PLANS FOR LOCATION OF CORRESPONDING FAN COIL UNIT. INSTALL WIRING BETWEEN CONDENSING UNIT AND FAN COIL UNIT COMPLETE.' Connect to FCU-5 through DS-2BFCU5 in room IDF BM214.
i. For CU-6 provide disconnect switch DS-RBCU6, wiring, raceways, and connections with roof plan note 3 'DISCONNECT SWITCH FOR FAN COIL UNIT SPLIT SYSTEM. REFER TO POWER PLANS FOR LOCATION OF CORRESPONDING FAN COIL UNIT. INSTALL WIRING BETWEEN CONDENSING UNIT AND FAN COIL UNIT COMPLETE.' Connect to FCU-5 through DS-3AFCU6 in room IDF BM300.
j. For CU-7 provide disconnect switch DS-RBCU7, wiring, raceways, and connections with roof plan note 3 'DISCONNECT SWITCH FOR FAN COIL UNIT SPLIT SYSTEM. REFER TO POWER PLANS FOR LOCATION OF CORRESPONDING FAN COIL UNIT. INSTALL WIRING BETWEEN CONDENSING UNIT AND FAN COIL UNIT COMPLETE.' Connect to FCU-5 through DS-3BFCU7 in room IDF BM314.
k. Provide two (2) rooftop GFCI/WP duplex receptacles on shared 1P-20A circuit from panelboard 32A2. Provide one (1) within 10 feet of rooftop condensing units CU-2 and CU-6. Provide one (1) within 10 feet of rooftop exhaust fan EF-1.
l. Provide two (2) rooftop GFCI/WP duplex receptacles on shared 1P-20A circuit from panelboard 32B2. Provide one (1) within 10 feet of rooftop condensing units CU-4, -5 and -6. Provide one (1) within 10 feet of rooftop air handling unit RTAHU-1.
m. Provide two (2) rooftop GFCI/WP duplex receptacles on shared 1P-20A circuit from panelboard 32B3. Provide one (1) within 10 feet of rooftop condensing unit CU-3. Provide one (1) within 15 feet of rooftop exhaust fans EF-3, -4, -5, and -6.

P. Sheet Number E-602

1. MODIFY Drawing E-602 as follows:

a. Genset GEN-1 is 400KW/500KVA, 480V, 3Φ, 4W.

b. Output circuit breakers from Genset GEN-1 are 3P-400A to ATS-LS, 3P-400A to ATS-EQ1, and 3P-225A to ATS-EQ2.

Q. Sheet Number E-603

1. MODIFY Drawing E-603 as follows:

a. Change feeder size to F250 for panelboards 32B1 and 32B2.

b. Remove panelboard 22A3.

c. Provide panelboard 12AEQ1 (208Y/120V, 3Φ, 4W, 60A MCB, 30 spaces), transformer T-1AEQ1 (15 kVA, 480V primary, 208Y/120V secondary), fused disconnect switch DS-T1AEQ1 fed from panelboard 14DPEQ1, wiring, raceways, circuit breakers, fuses, and connections for emergency equipment branch power for circulation pumps CP-1, CP-2, CP-3, and CP-4.

R. Sheet Number E-605

1. MODIFY Drawing E-605 as follows:

a. Change voltage of site lighting fixture types S1, S2, S3, S4, and S5 to 120/277 V.

b. Remove Energy Harness from site lighting fixture types S1 and S2.

S. Sheet Number E-606

1. DELETE AND REPLACE Drawing E-606 in its entirety.

T. Sheet Number E-614

1. ADD Drawing E-614 in its entirety.

U. Sheet Number E-615

1. ADD Drawing E-615 in its entirety.

V. Sheet Number E-616

1. ADD Drawing E-616 in its entirety.

3.8 T-SERIES DRAWINGS

A. Sheet Number TS101

1. DELETE AND REPLACE Plan TS101 per the attached.

END OF ADDENDUM 2

SECTION 237416.13 – PACKAGED, LARGE-CAPACITY, ROOFTOP AIR-CONDITIONING UNITS

PART 1 - GENERAL

1.1 RELATED DOCUMENTS

A. Drawings and general provisions of the Contract, including General and Supplementary Conditions and Division 01 Specification Sections, apply to this Section.

1.2 SUMMARY

A. This Section includes modular air handling units with hydronic coils and fans for outdoor installations.

1.3 SUBMITTALS

A. Product Data: For each type of air handling units indicated. Include the following:

1. Certified fan-performance curves with system operating conditions indicated.
2. Certified fan-sound power ratings.
3. Certified coil-performance ratings with system operating conditions indicated.
4. Motor ratings, electrical characteristics, and motor and fan accessories.
5. Material gages and finishes.
6. Filters with performance characteristics.
7. Dampers, including housings, linkages.
8. Wiring Diagrams: Power, signal, and control wiring.

B. Operation and Maintenance Data: For air handling unit equipment to include in maintenance manuals.

1.4 QUALITY ASSURANCE

A. Electrical Components, Devices, and Accessories: Listed and labeled as defined in NFPA 70, Article 100, by a testing agency acceptable to authorities having jurisdiction, and marked for intended use.

B. ARI Certification: Custom air-handling units and their components shall be factory tested according to ARI 430, “Central-Station Air-Handling Units,” and shall be listed and labeled by ARI.

C. Comply with NFPA 70.

1.5 COORDINATION

A. Coordinate size and location of concrete bases. Cast anchor-bolt inserts into bases. Concrete, reinforcement, and formwork requirements are specified in Division 3.

B. Coordinate size and location of structural-steel support members.

1.6 WARRANTY

A. Special Warranty: Manufacturer's standard form in which manufacturer agrees to replace components of the air-handling units that fail in materials or workmanship within specified warranty period.

1. Warranty Period for air handling units: one year from substantial completion. (Parts Only Warranty)

1.7 EXTRA MATERIALS

A. Furnish extra materials that match products installed and that are packaged with protective covering for storage and identified with labels describing contents.

1. Filters: 2 total set(s) of each type of filter specified.
2. Fan Belts: One set(s) of belts for each belt-driven fan.
3. Obtain receipt from Owner that above items have been received.

PART 2 - PRODUCTS

2.1 MANUFACTURERS

A. Manufacturers: Subject to compliance with requirements, provide products by one of the following:

1. Trane (Basis)
2. Carrier
3. York/JCI
4. Daikin
5. Pace.

2.2 MANUFACTURED UNITS

A. Air handling units shall be factory assembled and consist of fans, motor and drive assembly, coils, damper, plenums, filters, condensate pans, mixing dampers, damper actuators, control devices, empty control cabinet and dedicated space for field installed VFDs..

2.3 Cabinet

A. Materials: Formed and reinforced double-wall insulated panels, fabricated to allow removal for access to internal parts and components, with joints between sections sealed. Panels shall be designed for outdoor installation. Roof shall be sloped.

1. Outside Casing: Galvanized steel, 18 gage.
2. Under scheduled supply air temperature and design conditions on the exterior of the unit, condensation shall not form on the casing exterior.
3. All permanently joined flanged panel surfaces shall be sealed with an individual strip of 1/8” x 3/8” tape sealer. Wall and roof seams shall be turned inward to provide a clean flush exterior finish. All panel seams shall be sealed during assembly to produce an airtight unit.
4. The internal liner in the coil sections shall be suitable for washing with a pressure washer or steam cleaner without risk of wetting the insulation.
5. The casing shall be constructed such that structural frames are free standing and double wall panels are non-load bearing.
6. All exposed welds shall be cleaned, coated with rust inhibitor primer, and finished with rust inhibiting enamel.

B. Cabinet Insulation: Comply with NFPA 90A or NFPA 90B.

1. Thickness: 2 inches.

C. Access Panels and Doors: Same materials and finishes as cabinet, complete with hinges, latches, handles, and gaskets. Inspection and access panels and doors shall be sized and located to allow periodic maintenance and inspections.

1. Door handles shall be Ventlok model #310 high pressure latches operable from either side of the door. The door opening shall be fully gasketed with continuous ½” closed cell hollow round black gasketing and a metal encapsulated reinforcing backing that mechanically fastens to the door frame. The outside of the door shall be flush with the unit. The minimum door opening size shall be 18” x 70” (where unit height permits). Fan compartments must have a door of minimum width to remove the motor.
2. All access doors must swing against the air pressure. (i.e. positive pressure plenum doors must swing in.)
3. Provide access doors in the following locations and where shown on drawings:

    a. Fan Section
    b. Access Section
    c. Coil Section
    d. Damper Section
    e. Filter Section: Doors to allow periodic removal and installation of filters.
    f. Piping vestibules

D. Condensate Drain Pans: Formed sections of stainless-steel sheet complying with requirements in ASHRAE 62. Fabricate pans with slopes in two planes to collect condensate from cooling coils (including coil piping connections and return bends) when units are operating at maximum catalogued face velocity across cooling coil.

1. Double-Wall Construction: Fill space between walls with foam insulation and seal moisture tight.
2. Units with stacked coils shall have an intermediate drain pan or drain trough to collect condensate from top coil and drop tube to guide condensate to the bottom drain pan.
3. Ensure unit installed height above floor allows enough space for condensate trap piping above the mechanical room floor.

E. Piping vestibules: Same materials and finishes as cabinet, complete with access doors. Vestibules shall be large enough to house supply and return piping with fittings and shutoff valves. Curb shall be built to support the vestibules and to allow routing of piping into the vestibules from below through the curb space.

F. Intake and relief hoods: Same materials and finish as cabinet. Sized for the design air flows to minimize moisture admittance to the unit interior air path.

G. Control cabinet: Weatherproof vented enclosure factory mounted to the exterior of the unit, with pathways for wring routed into the unit inner casing.

H. VFD space: Weatherproof enclosure or dedicated space in the fan sections, with proximity to the fan motors, for field installation of TCC provided VFDs.

2.4 FAN SECTION

A. Fan bearings shall be heavy duty, grease lubricated, self-aligning, antifriction pillow block type. Fan bearings shall be rated for a minimum average life (L-50) per ANSI/ABMA of 400,000 hours at design operating conditions. For easy accessibility, lubrication lines for fan bearings shall extend to the drive side of the fan, on the unit interior.

B. Centrifugal Fan Housings: Formed- and reinforced-steel panels to make curved scroll housings with shaped cutoff, spun-metal inlet bell, and access doors or panels to allow entry to internal parts and components.

1. Plug Fans: With steel cabinet. Fabricate without fan scroll and volute housing.

C. Fan Assemblies: Statically and dynamically balanced for inverter duty operation over the entire range of fan operation (30% to 100% RPM).

D. Shafts: Statically and dynamically balanced and designed for continuous operation at maximum rated fan speed and motor horsepower, with final alignment and belt adjustment made after installation.

1. Turned, ground, and polished hot-rolled steel with keyway. Ship with a protective coating of lubricating oil.
2. Designed to operate at no more than 70 percent of first critical speed at top of fan's speed range.
3. Key fan wheels to shaft.

E. Vibration Control: Install fans on open-spring vibration isolators having a minimum of 2-inch static deflection and side snubbers.

1. Connect fan to unit housing with flexible bulkhead canvas connection.

2.5 MOTORS

A. Fan motors shall be mounted and isolated on the same integral base as the fan.

B. Fan motors shall be heavy duty, TEFC, premium efficiency, operable at 208 volts, 60 Hz, 3-phase, 1800 rpm. Motors shall meet USA epact of 1992.

C. Shaft grounding kits shall be provided and installed.

D. Approved manufacturers: Baldor

2.6 COILS

A. Fins shall have collars drawn, belled and firmly bonded to the tubes by means of mechanical expansion of the tubes. No soldering or tinning shall be used in the bonding process. Coils shall be mounted in the unit casing to be accessible for service. Capacities, pressure drops and selection procedure shall be certified in accordance with ARI Standard 410.

B. Coils shall be fully enclosed within the casing and cooling coils shall be on mounted 304 stainless steel angle racks manufactured by allow coils to slide out individually. Heating coils shall be mounted on galvanized angle racks manufactured to allow coils to slide out individually.

C. Removable coil access panels shall be provided for removal of coils through the casing wall. “Coils shall be individually removable away from the access side. Coils must be individually racked, removable through the side access panels.

D. The manufacturer shall provide stainless steel drain pans for all cooling coils. Drain pans shall be continuously welded. The coil section must have intermediate drain pans and shall be interconnected with 1 inch stainless steel drain lines. Drain pans shall be IAQ sloped and fully drainable.

E. Coils shall be designed for chilled water or hot water service.

F. All pipe connections shall be on the same unit end, extended through the casing 4” for ease of connection.

G. Water coils handling recently mixed air, or direct outside air, shall be fully drainable by removing a single threaded plug for each coil row.

H. The primary surface shall be round seamless 0.62 in .035 O.D. copper tube on 1 inch centers, staggered in the direction of airflow. All joints shall be brazed.

I. The secondary surface shall consist of rippled aluminum plate fins for higher capacity and structural strength. Fins shall have full drawn collars to provide a continuous surface cover over the entire tube for maximum heat transfer. Bare copper tube shall not be visible between fins and the fins shall have no openings or holes which might accumulate lint and dirt. Tubes shall be mechanically expanded into the fins to provide a continuous primary to secondary compression bond over the entire finned length for maximum heat transfer rates.

J. The coil connection locations shall permit universal mounting of the coil for right or left hand airflow and have equal pressure drop through all circuits. Coils shall be circuited for counterflow heat transfer to provide the maximum mean effective temperature difference for maximum heat transfer rates.

K. Headers on water coils shall be seamless copper tubing. The headers shall have intruded tube holes to provide a large brazing surface for maximum strength and inherent flexibility.

L. The complete 5 coil core shall be tested with 315 lbs air pressure under warm water and be suitable for operation at 250 psi working pressures. Individual tube and core tests before installation of headers are not considered satisfactory. Hydrostatic tests alone will not be acceptable. Water cooling coils shall be circuited for drain ability.

2.7 DAMPERS (EXHAUST, OUTSIDE, AND RETURN)

A. All outside, return, and exhaust dampers shall be modulating style.

B. Aluminum airfoil frames and blades shall be a minimum of 12 gauge extruded aluminum. Blades shall be of a single unit airfoil design 6 inches wide.

C. Frames shall be extruded aluminum channel with grooved inserts for vinyl seals. Standard frames shall be 2 in. X 4 in. X 0.62 in. on the linkage side, 1 in. X 4 in. X 1 in. on the other 3 sides.

D. Pivot rods shall be 0.88 in hexagon extruded aluminum interlocking into the blade section. Bearings shall be of a double sealed type with a Celcon inner bearing on a rod within a Polycarbonate outer bearing inserted into the frame to prevent the outer bearing from rotating.

E. The bearing shall be designed so there are no metal-to-metal or metal-to bearing riding surfaces. The interconnecting linkage shall have a separate Celcon bearing to eliminate friction inside the linkage.

F. Blade linkage hardware shall be installed in a frame outside the airstream. All hardware shall be on non-corrosive, reinforced cadmium plated steel.

G. Damper seals shall be designed for minimum air leakage by means of overlapping seals.

H. Jack shaft assemblies shall be provided for multiple damper installations.

I. All dampers shall be linked from the factory.Acceptable dampers are TAMCO 1000

2.8 FILTER SECTION

A. Provide filter racks for 2 inch (Merv 8) filters .

B. The holding frames shall be formed with continuous recess for retention of filter frames with caulking compound applied between the frames before riveting them into assembled banks.

C. Pre-filters are to be mounted on the entering air face of the filter bank.

D. Filters shall incorporate a "pleat" type design which creates a wide space between adjacent pleats on the air-leaving side.

E. A magnehelic, differential pressure gauge shall be factory installed and flush mounted to measure the pressure drop across each filter bank.

2.9 ELECTRICAL

A. All wiring shall be installed in EMT conduit with standard fittings.

B. Each supply fan and exhaust fan motor shall be wired to an external junction box. Each fan motor shall have its own electrical connection.

PART 3 - EXECUTION

3.1 EXAMINATION

A. Examine areas and conditions, with Installer present, for compliance with requirements for installation tolerances and other conditions affecting performance of the Work.

B. Examine casing insulation materials and filter media before air-to-air energy recovery equipment installation. Reject insulation materials and filter media that are wet, moisture damaged, or mold damaged.

C. Examine roughing-in for electrical services to verify actual locations of connections before installation.

D. Proceed with installation only after unsatisfactory conditions have been corrected.

3.2 INSTALLATION

A. Equipment Mounting: Install roof mounted air-handling unit equipment on 24" roof curb.

B. Install units with clearances for service and maintenance.

C. Install new filters at completion of equipment installation and before testing, adjusting, and balancing.

D. Pipe drains from units and drain pans to nearest floor drain; use ASTM B 88, Type L, drawn-temper copper water tubing with soldered joints, same size as condensate drain connection.

3.3 CONNECTIONS

A. Comply with requirements for piping specified in Division 23 Section "Hydronic Piping." Drawings indicate general arrangement of piping, fittings, and specialties.

B. Install piping in vestibules to allow service and maintenance.

C. Connect cooling condensate drain pans with air seal trap at connection to drain pan and install cleanouts at changes in pipe direction.

D. Water Piping: Comply with applicable requirements in Division 23 Section "Hydronic Piping." Install shutoff valve and union or flange at each coil supply connection. Install balancing valve and union or flange at each coil return connection.

E. Comply with requirements for ductwork specified in Division 23 Section "Metal Ducts."

F. Electrical Connections: Coordinate and install interconnection of wiring across shipping splits. Comply with applicable requirements in Division 26 Sections.

1. Install electrical devices furnished with units but not factory mounted.

3.4 FIELD QUALITY CONTROL

A. Manufacturer's Field Service: Engage a factory-authorized service representative to inspect, test, and adjust components, assemblies, and equipment installations, including connections.

B. Tests and Inspections:

1. Operational Test: After electrical circuitry has been energized, start units to confirm proper motor rotation and unit operation.
2. Adjust seals and purge.
3. Test and adjust controls and safeties. Replace damaged and malfunctioning controls and equipment.
4. Set initial temperature and humidity set points.
5. Set field-adjustable switches and circuit-breaker trip ranges as indicated.

C. Prepare test and inspection reports.

3.5 DEMONSTRATION

A. Engage a factory-authorized service representative to train Owner's maintenance personnel to adjust, operate, and maintain air-to-air energy recovery units.

END OF SECTION 237200